ENG: The measurements mentioned in the drawings and in TimberIN websites are only approximate data. They will differ from the measurements of the finished product. It is due to the fact that our products are individually designed and hand-made. However, if one or more measurements are very important, please mention before ordering. We will pay big attention to your requirements in the production process. This will ensure that the product will be produced as closely as possible to your requirements.

DE: Die in den Zeichnungen und auf den TimberIN-Websites genannten Maße sind nur ungefähre Angaben. Sie unterscheiden sich von den Maßen des fertigen Produkts. Dies liegt daran, dass unsere Produkte individuell gestaltet und handgefertigt werden. Wenn jedoch eine oder mehrere Messungen sehr wichtig sind, geben Sie dies bitte vor der Bestellung an. Wir werden Ihre Anforderungen im Produktionsprozess sehr berücksichtigen. Dadurch wird sichergestellt, dass das Produkt so genau wie möglich Ihren Anforderungen entspricht.

FR: Les mesures mentionnées dans les dessins et sur les sites Web TimberIN ne sont que des données approximatives. Ils différeront des mesures du produit fini. Cela est dû au fait que nos produits sont conçus individuellement et fabriqués à la main. Cependant, si une ou plusieurs mesures sont très importantes, merci de le mentionner avant de commander. Nous prêterons une grande attention à vos besoins dans le processus de production. Cela garantira que le produit sera fabriqué aussi près que possible de vos besoins.

DK: Målingerne nævnt på tegningerne og på TimberIN-websteder er kun omtrentlige data. De afviger fra målingerne af det færdige produkt. Det skyldes, at vores produkter er individuelt designet og håndlavet. Hvis en eller flere målinger dog er meget vigtige, skal du nævne det før du bestiller. Vi vil være meget opmærksomme på dine krav i produktionsprocessen. Dette vil sikre, at produktet produceres så tæt som muligt efter dine krav.

NO: Målingene nevnt på tegningene og på TimberIN nettsteder er bare omtrentlige data. De vil avvike fra målingene av det ferdige produktet. Det skyldes det faktum at produktene våre er individuelt designet og håndlaget. Imidlertid, hvis en eller flere målinger er veldig viktige, må du nevne før du bestiller. Vi vil ta stor vekt på dine krav i produksjonsprosessen. Dette vil sikre at produktet blir produsert så nært som mulig dine behov.

IT: Le misure menzionate nei disegni e nei siti Web di TimberIN sono solo dati approssimativi. Differiranno dalle misure del prodotto finito. È dovuto al fatto che i nostri prodotti sono progettati e realizzati a mano individualmente. Tuttavia, se una o più misurazioni sono molto importanti, si prega di menzionare prima di ordinare. Presteremo grande attenzione alle vostre esigenze nel processo di produzione. Ciò garantirà che il prodotto sarà prodotto il più vicino possibile alle vostre esigenze.

NL: De in de tekeningen en op TimberIN-websites genoemde metingen zijn slechts benaderende gegevens. Ze zullen verschillen van de afmetingen van het eindproduct. Het is te wijten aan het feit dat onze producten individueel zijn ontworpen en met de hand zijn gemaakt. Als een of meer metingen erg belangrijk zijn, vermeld dit dan voordat u bestelt. We zullen veel aandacht besteden aan uw eisen in het productieproces. Dit zorgt ervoor dat het product zo dicht mogelijk bij uw eisen wordt geproduceerd.

SWE: Mätningarna som nämns på ritningarna och på TimberIN-webbplatser är endast ungefärliga data. De kommer att skilja sig från måtten på den färdiga produkten. Det beror på att våra produkter är individuellt designade och handgjorda. Om en eller flera mätningar är mycket viktiga, berätta dock innan du beställer. Vi kommer att ägna stor uppmärksamhet åt dina krav i produktionsprocessen. Detta kommer att säkerställa att produkten produceras så nära dina krav som möjligt.

PL: Pomiary wymienione na rysunkach i na stronach internetowych TimberIN są jedynie danymi przybliżonymi. Będą się różnić od pomiarów gotowego produktu. Wynika to z faktu, że nasze produkty są indywidualnie zaprojektowane i wykonane ręcznie. Jeśli jednak co najmniej jeden pomiar jest bardzo ważny, należy o tym wspomnieć przed złożeniem zamówienia. Zwrócimy dużą uwagę na Twoje wymagania w procesie produkcyjnym. Zapewni to, że produkt będzie produkowany jak najbliżej Twoich wymagań.

MODERN OUTDOOR GARDEN SAUNA
TECHNICAL SHEET

TimberIN
BALTIC SPA & SAUNAS

Table of contents

GENERAL INFO (1) 3
GENERAL INFO (2) 4
2000 MM MODERN SAUNA 5
3000 MM MODERN SAUNA 10
4000 MM MODERN SAUNA 15
5000 MM MODERN SAUNA 20
WOOD BURNING HARVIA HEATERS 25
WOOD BURNING HARVIA HEATER SAFETY DISTANCES APPLIED IN TIMBERIN SAUNAS 26
ELECTRIC HARVIA HEATERS 27
THERMAL INSULATION 28

TiMberin

GENERAL INFO (1)

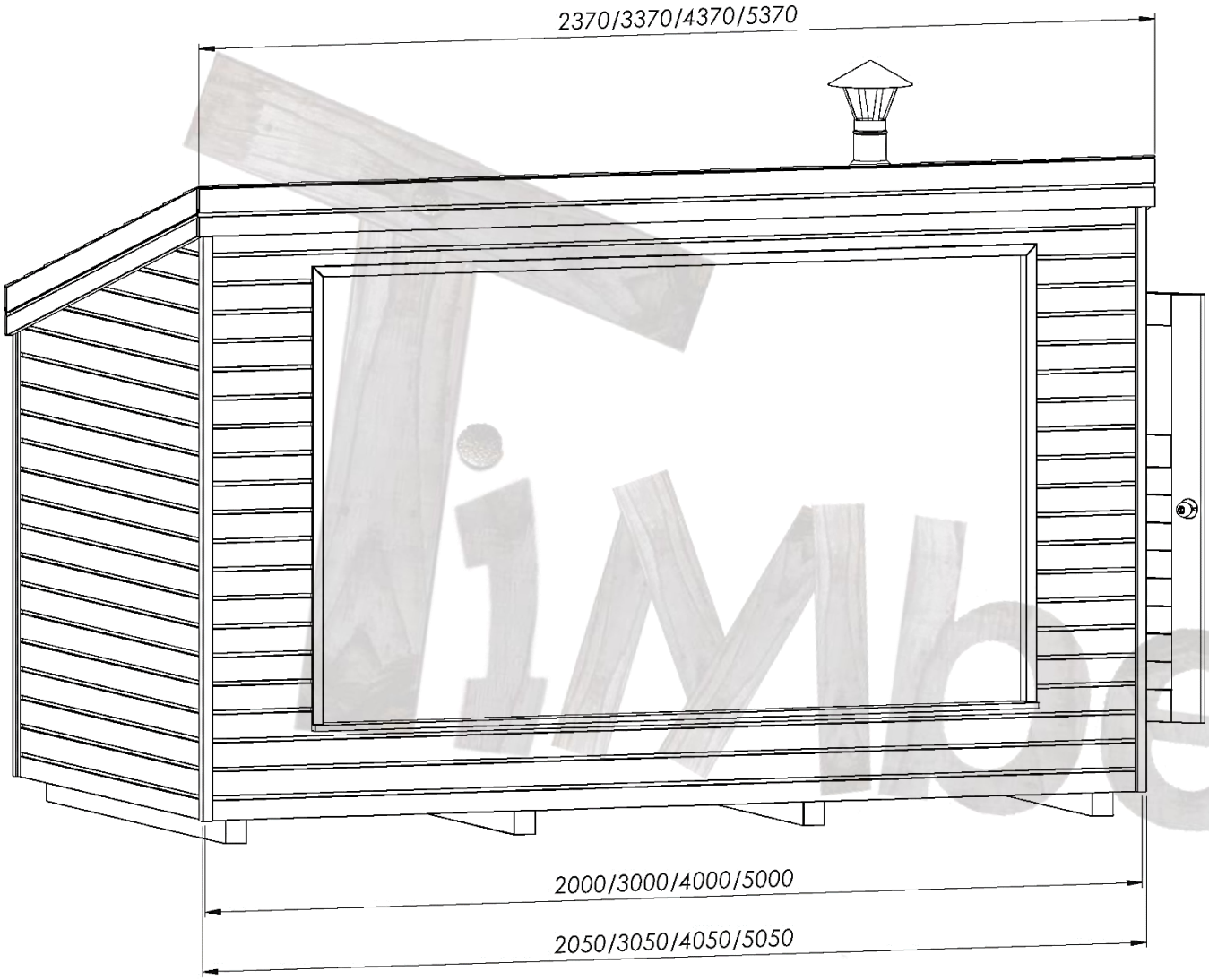

MODEL	GENERAL MEASUREMENTS
(1)	
Base length	2000 mm
Exterior length	2050 mm
Roof exterior length	2370 mm
(2)	
Base length	3000 mm
Exterior length	3050 mm
Roof exterior length	3370 mm
(3)	
Base length	4000 mm
Exterior length	4050 mm
Roof exterior length	4370 mm
(4)	
Base length	5000 mm
Exterior length	5050 mm
Roof exterior length	5370 mm

3D view of this model

GENERAL INFO (2)

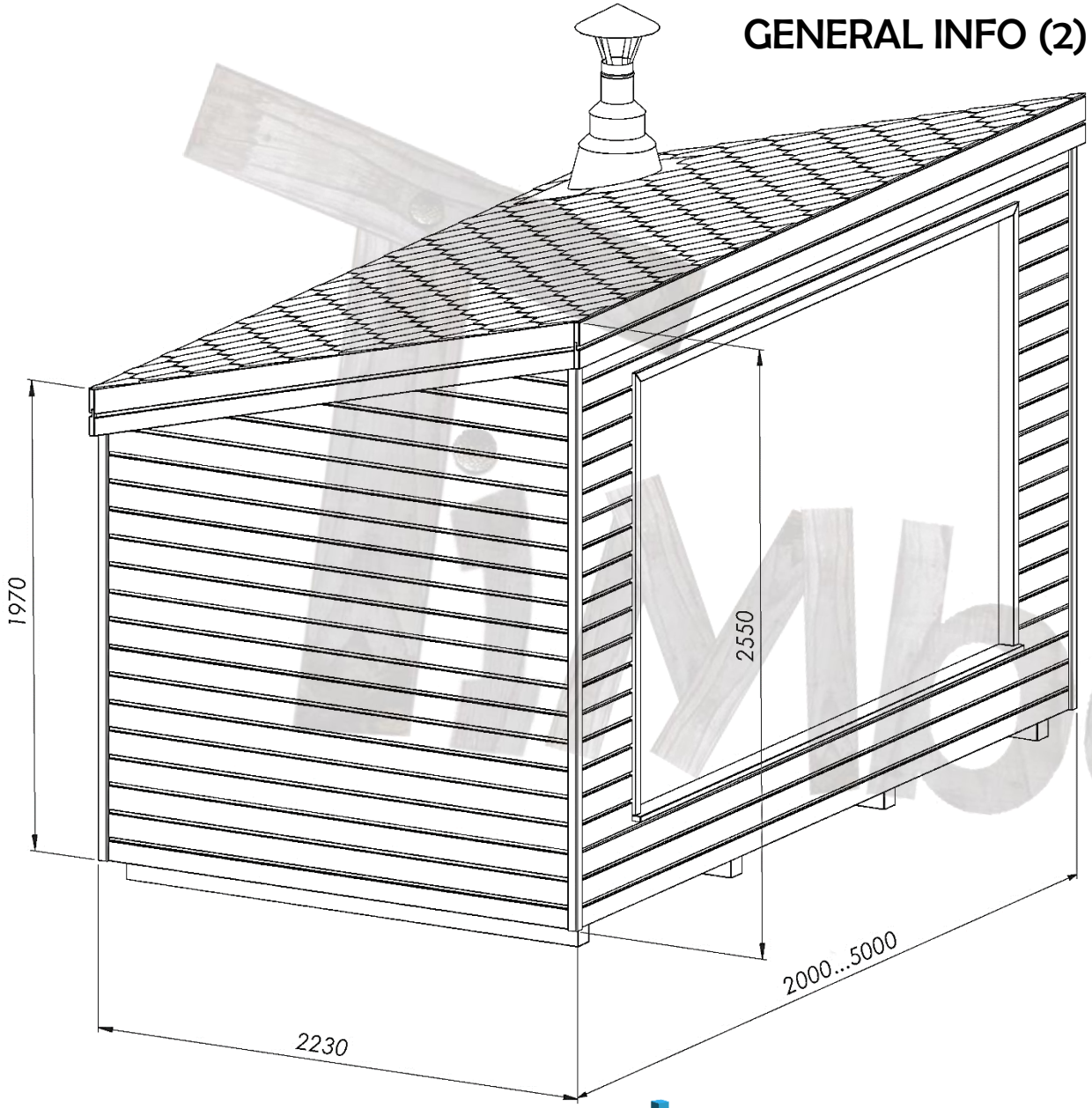

MODEL	GENERAL MEASUREMENTS
Height (1)	1970 mm
Height (2)	2550 mm
Width	2230 mm
Length	2000 – 5000 mm

3D view of this model

MyWerin

2000 MM MODERN SAUNA

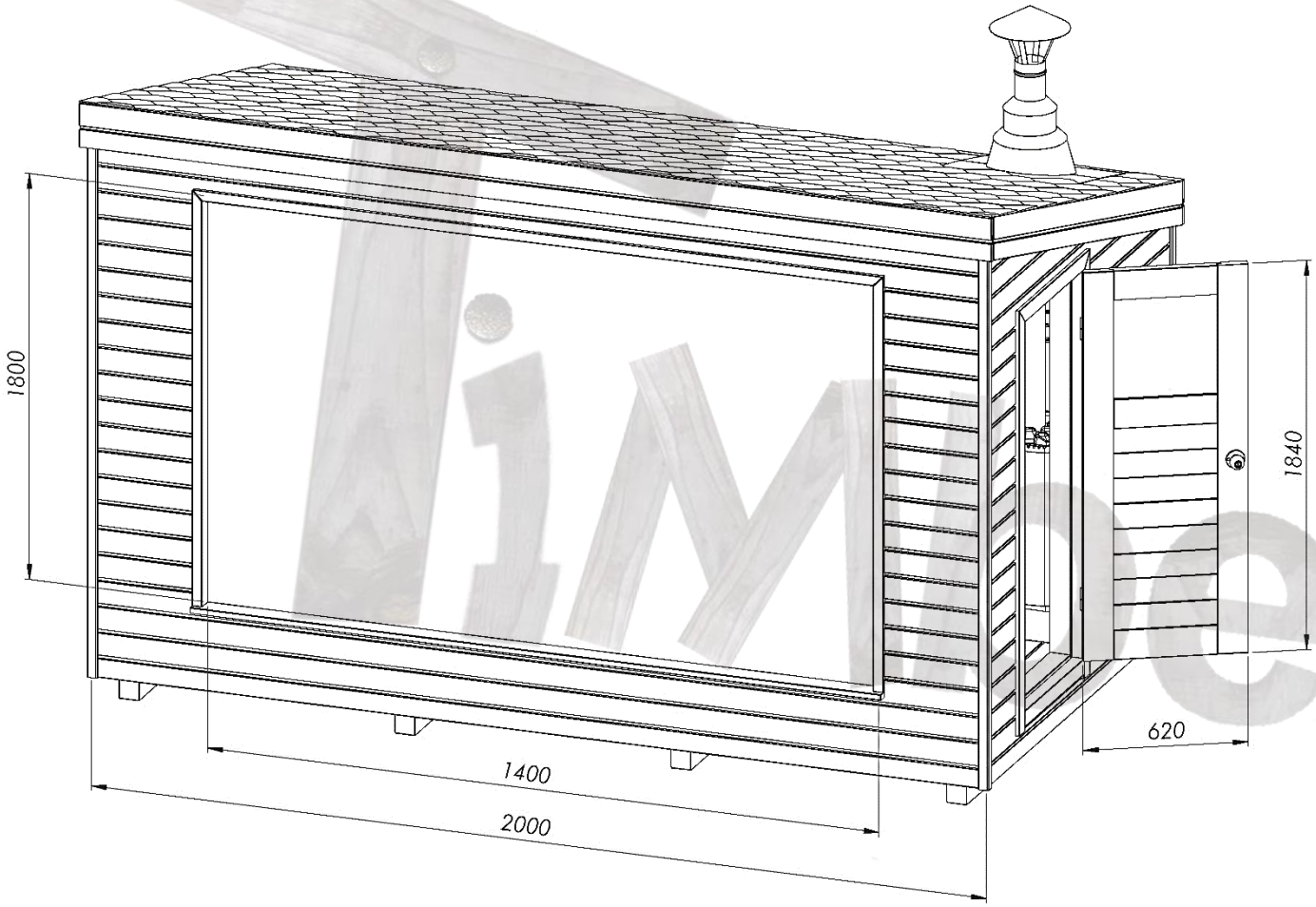

MODEL	2000 MM MODERN SAUNA
Seating capacity	2 - 4
Length	2000 mm
Width	2230 mm
Height	2550 mm
Panoramic window	1800 x 1400 mm
Recommended official “Harvia” heater for this sauna	Harvia Cilindro 9 kW

INTERIOR LAYOUT (1)

MODEL	INTERIOR LAYOUT of insulated sauna
Length outside	2000 mm
Length inside	1760 mm
Width outside	2230 mm
Width inside	1960 mm
Length of the benches	1960 mm
Width of the benches	480 mm

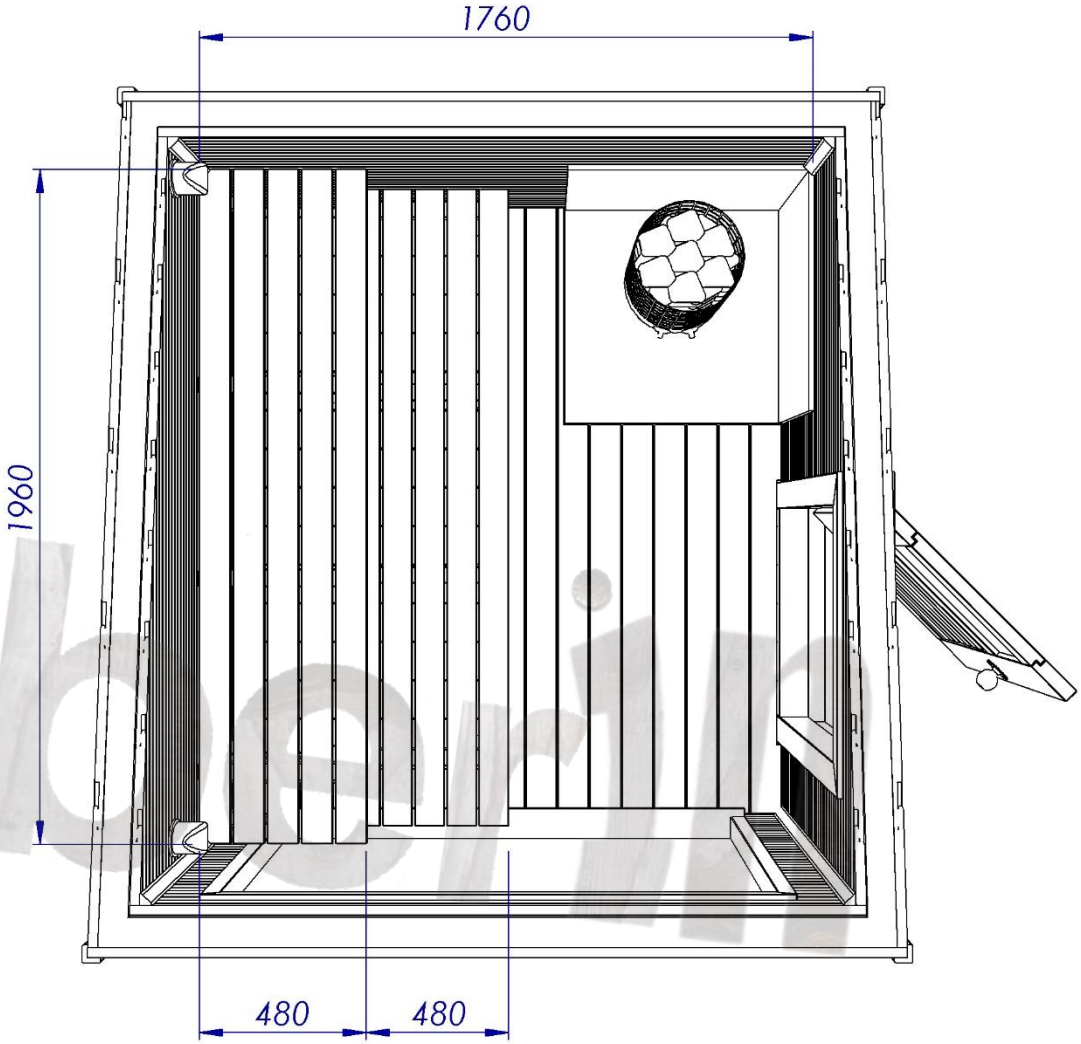

INTERIOR LAYOUT (2)

MODEL	INTERIOR LAYOUT of insulated sauna
Height of the benches	490 mm 970 mm
Width of the benches	480 mm
Height inside	1650 mm 2120 mm

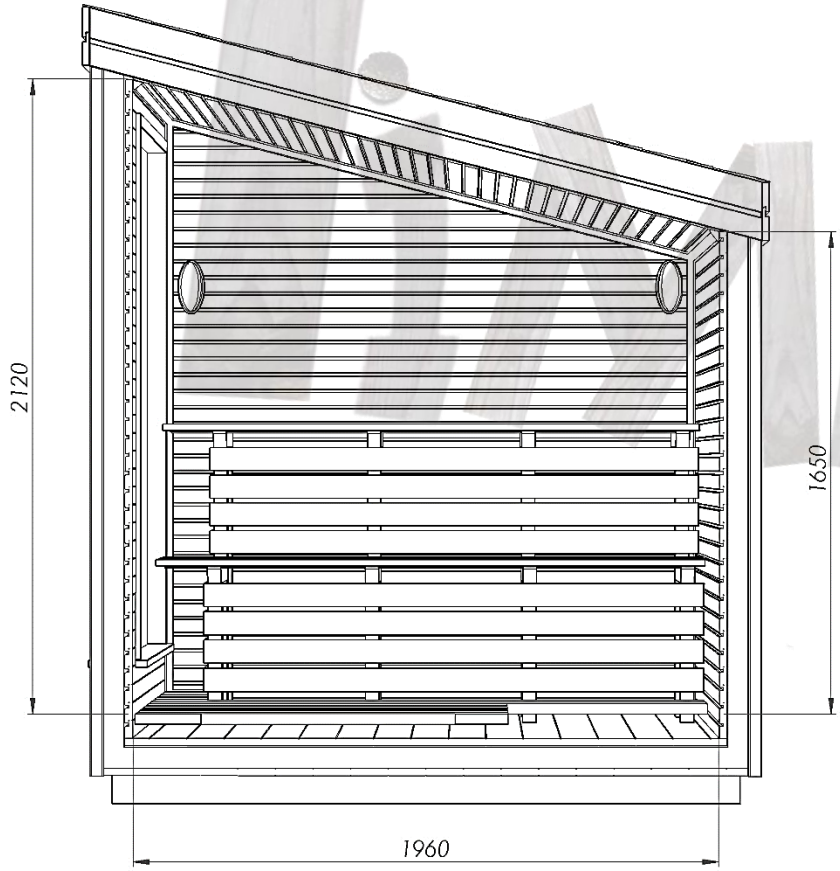

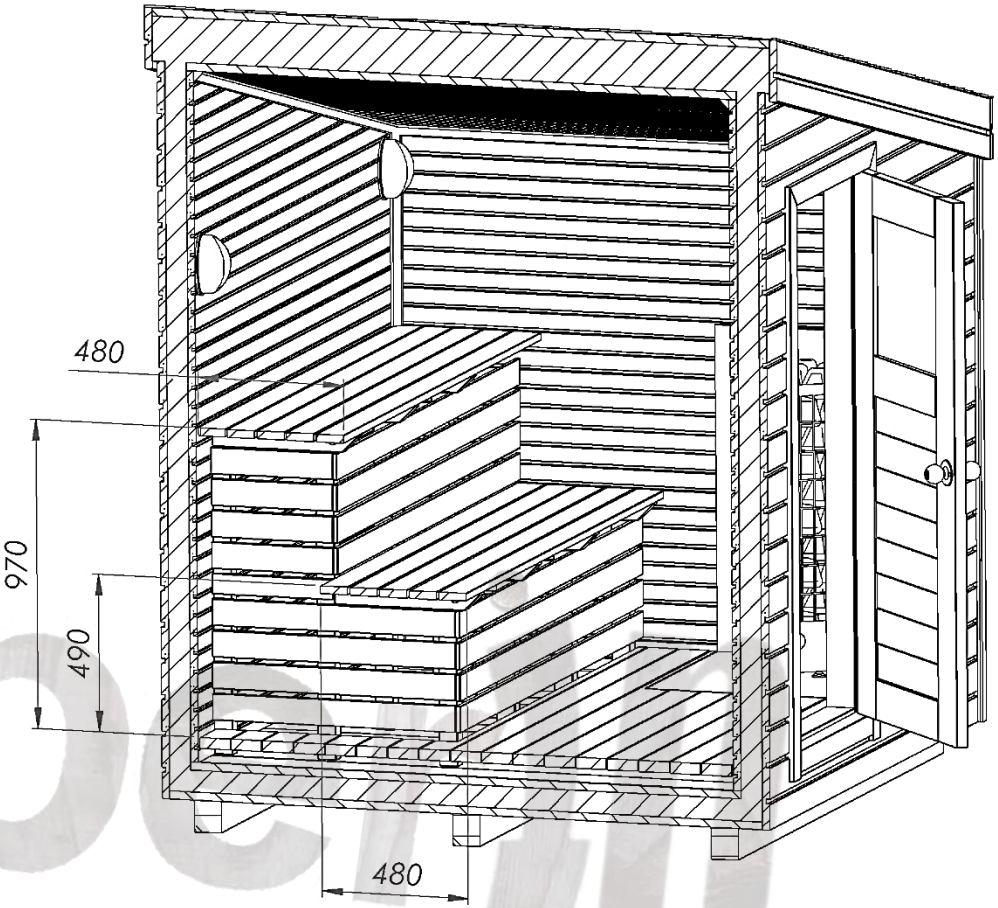

BASE MEASUREMENTS

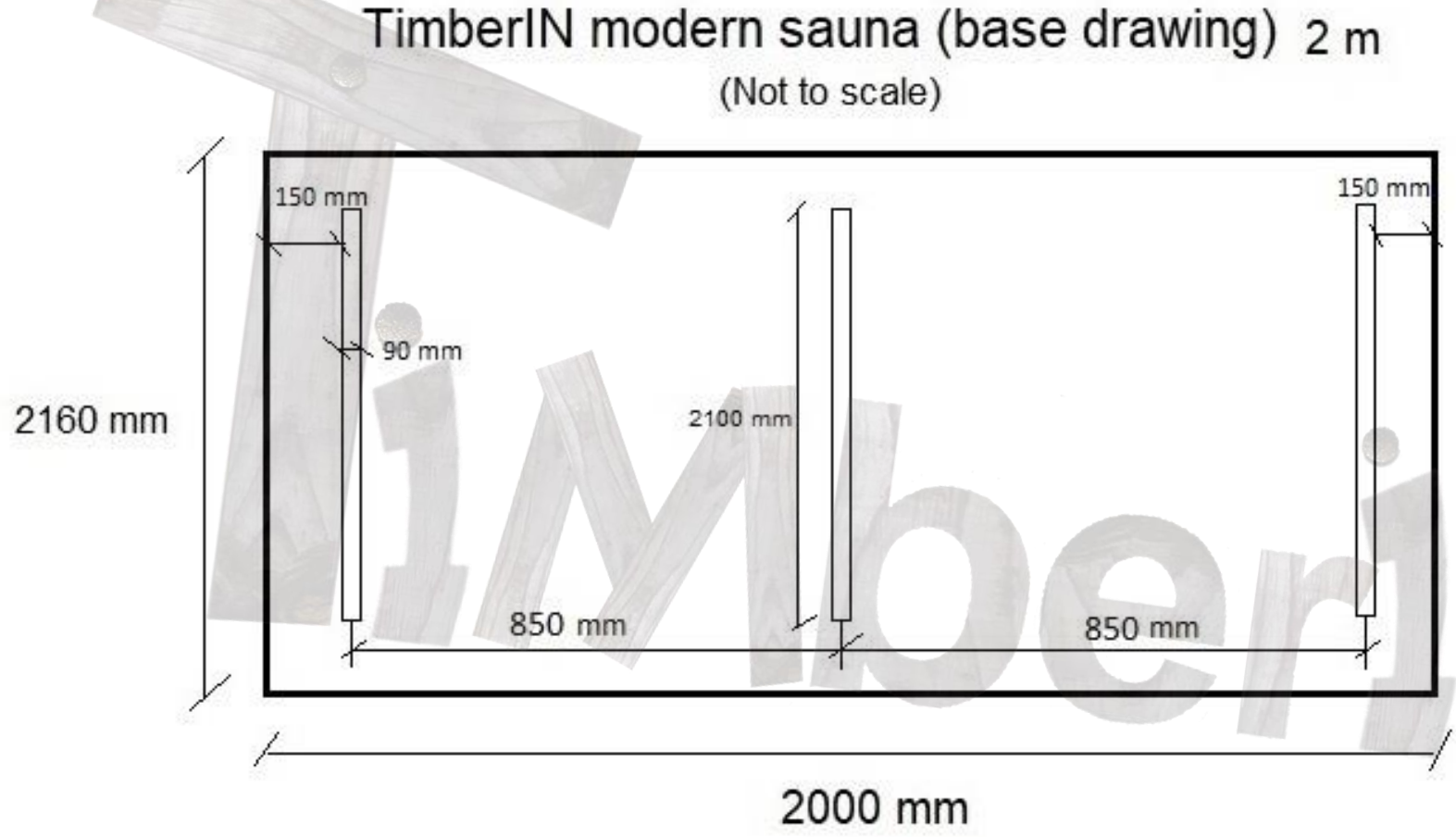

DELIVERY INFO

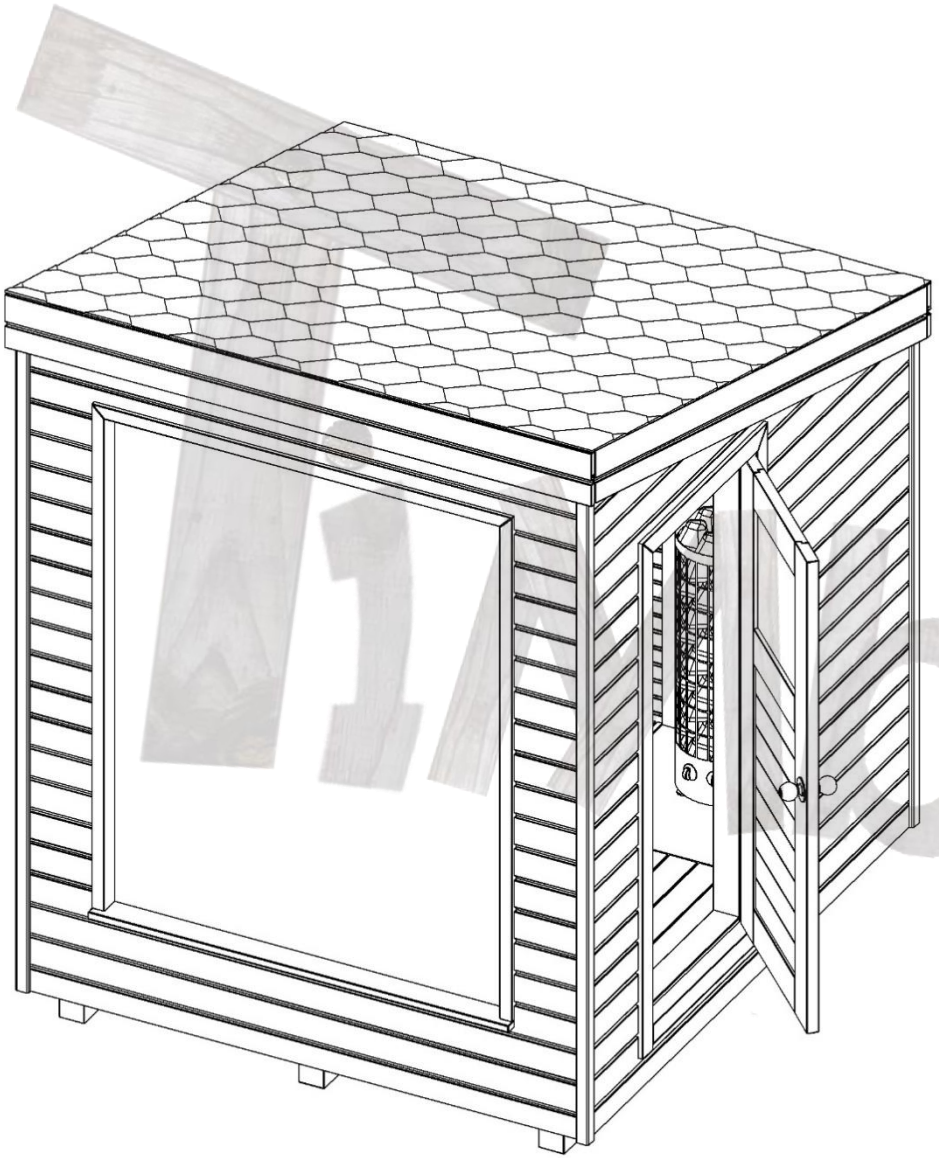

MODEL 2000 MM MODERN SAUNA	DELIVERY INFO
Assembled sauna measurements for shipping	Height: 2550 mm Width: 2230 mm Length: 2370 mm Weight ~1000 kg

3000 MM MODERN SAUNA

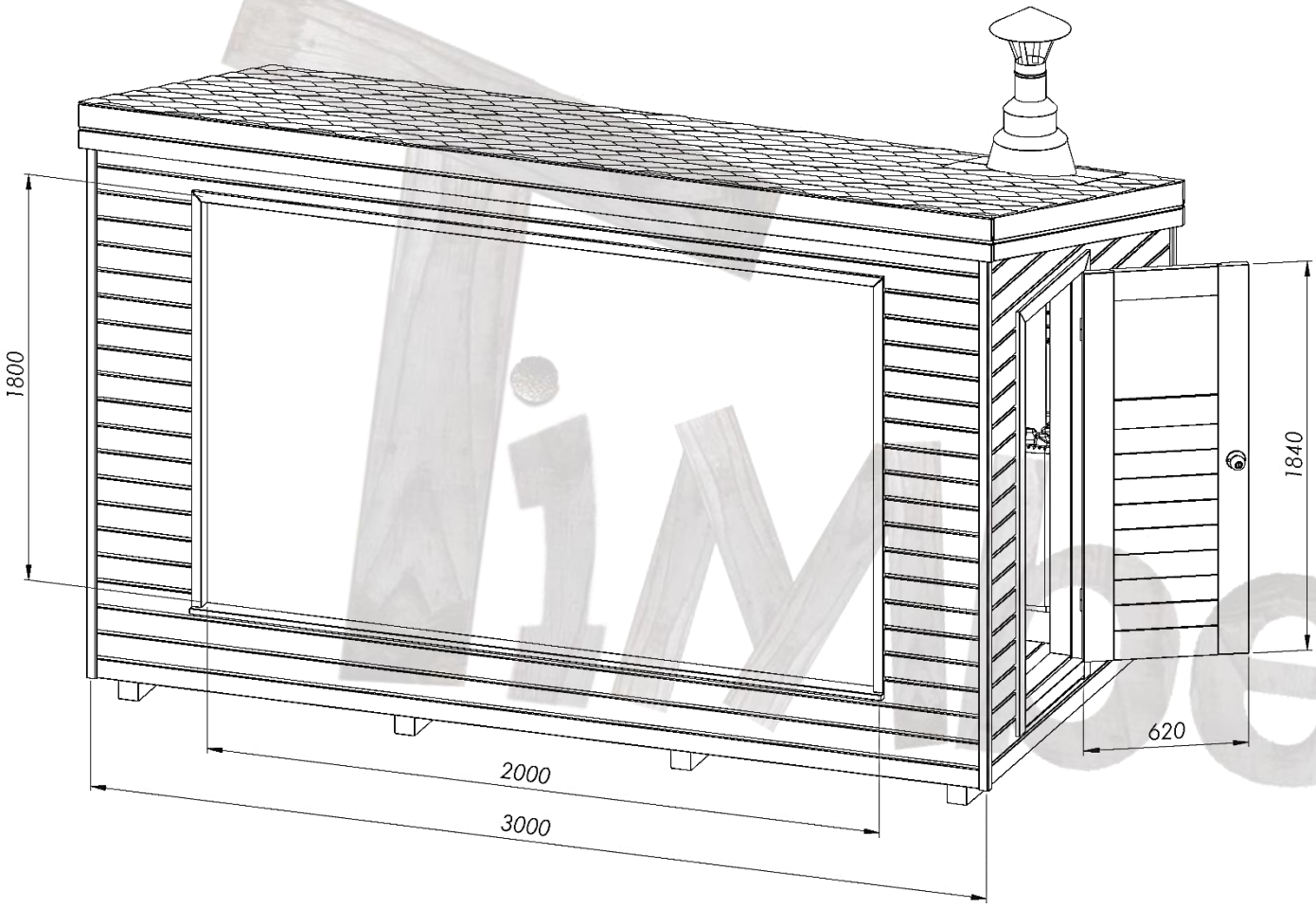

MODEL	3000 MM MODERN SAUNA
Seating capacity	4 - 6
Length	3000 mm
Width	2230 mm
Height	2550 mm
Panoramic window	1800 x 2000 mm
Recommended official “Harvia” heater for this sauna	Harvia M3 Harvia M3 SL

INTERIOR LAYOUT (1)

MODEL	INTERIOR LAYOUT of insulated sauna
Length outside	3000 mm
Length inside	2760 mm
Width outside	2230 mm
Width inside	1960 mm
Length of the benches	1960 mm and 2010 mm
Width of the benches	480 mm

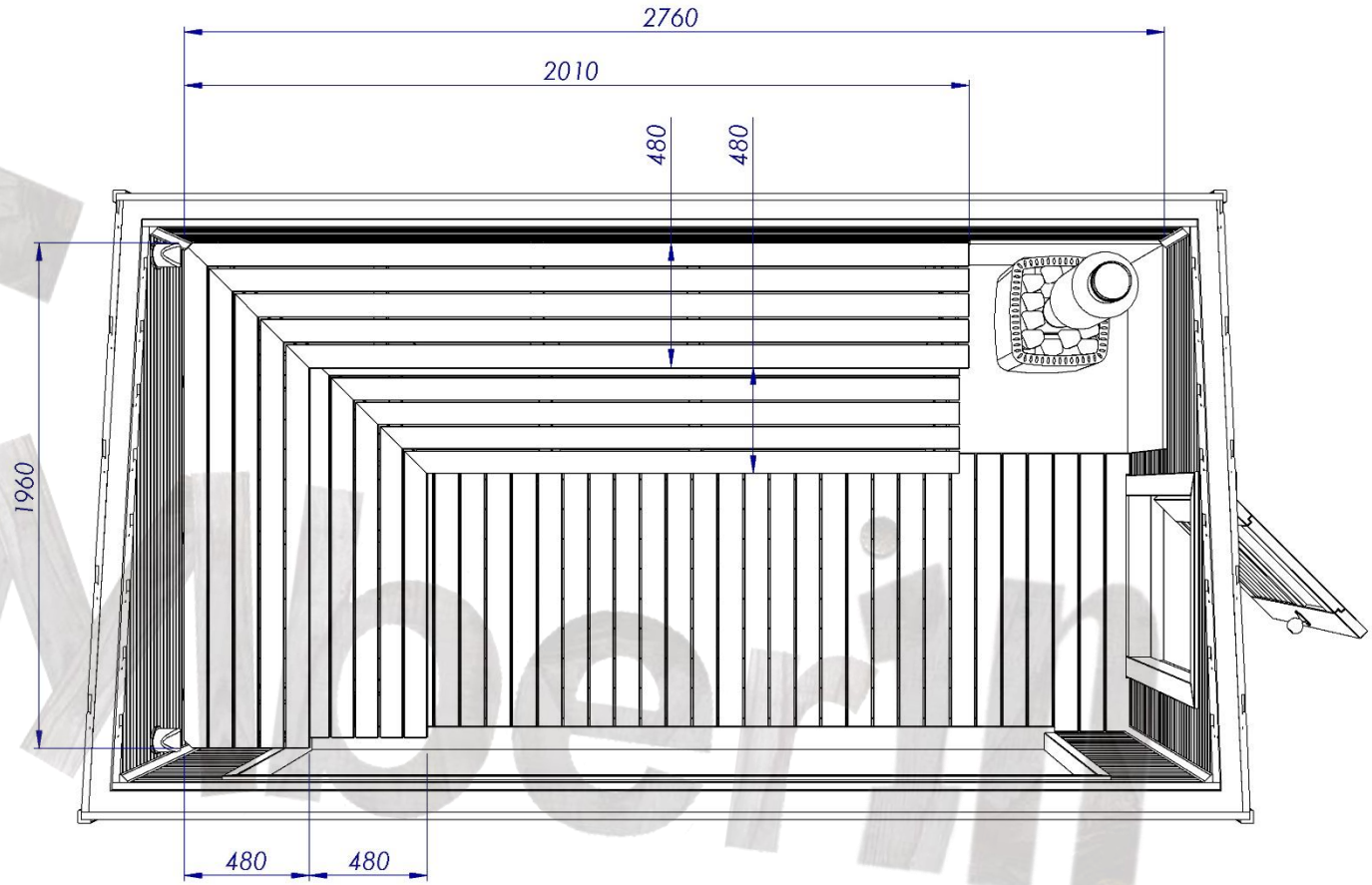

INTERIOR LAYOUT (2)

MODEL	INTERIOR LAYOUT of insulated sauna
Height of the benches	490 mm 970 mm
Width of the benches	480 mm
Height inside	1650 mm 2120 mm

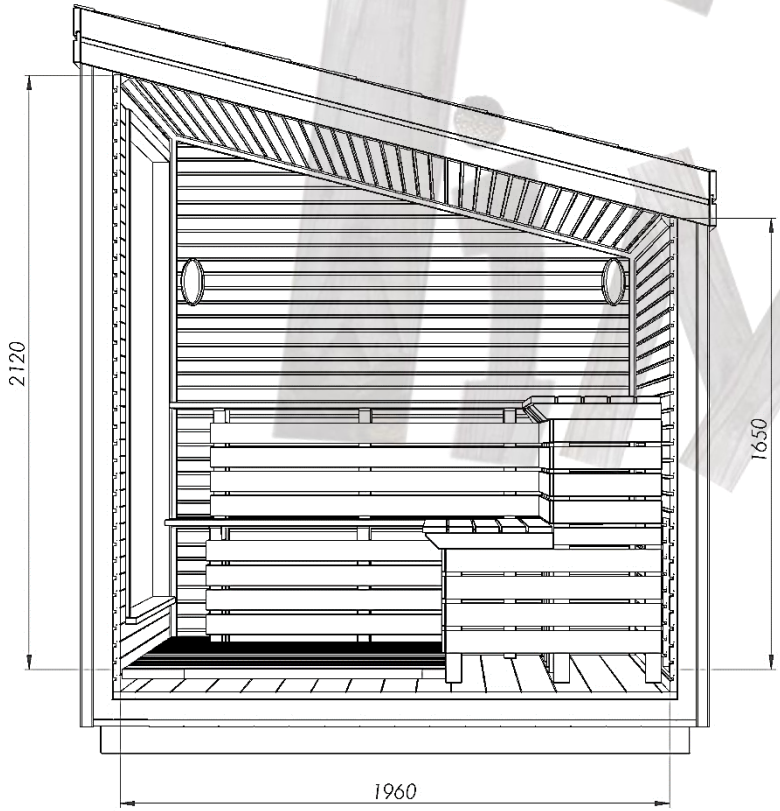

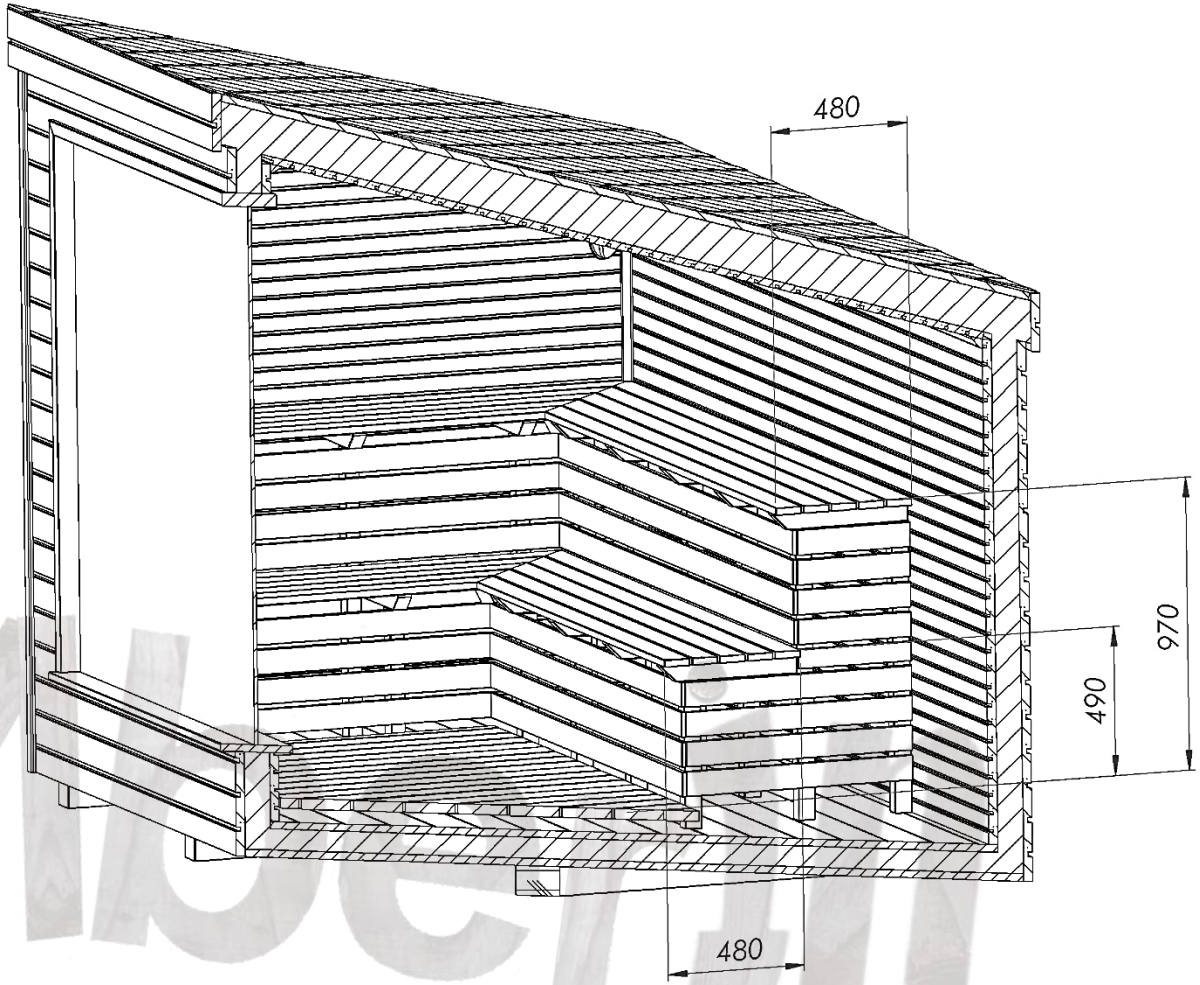

BASE MEASUREMENTS

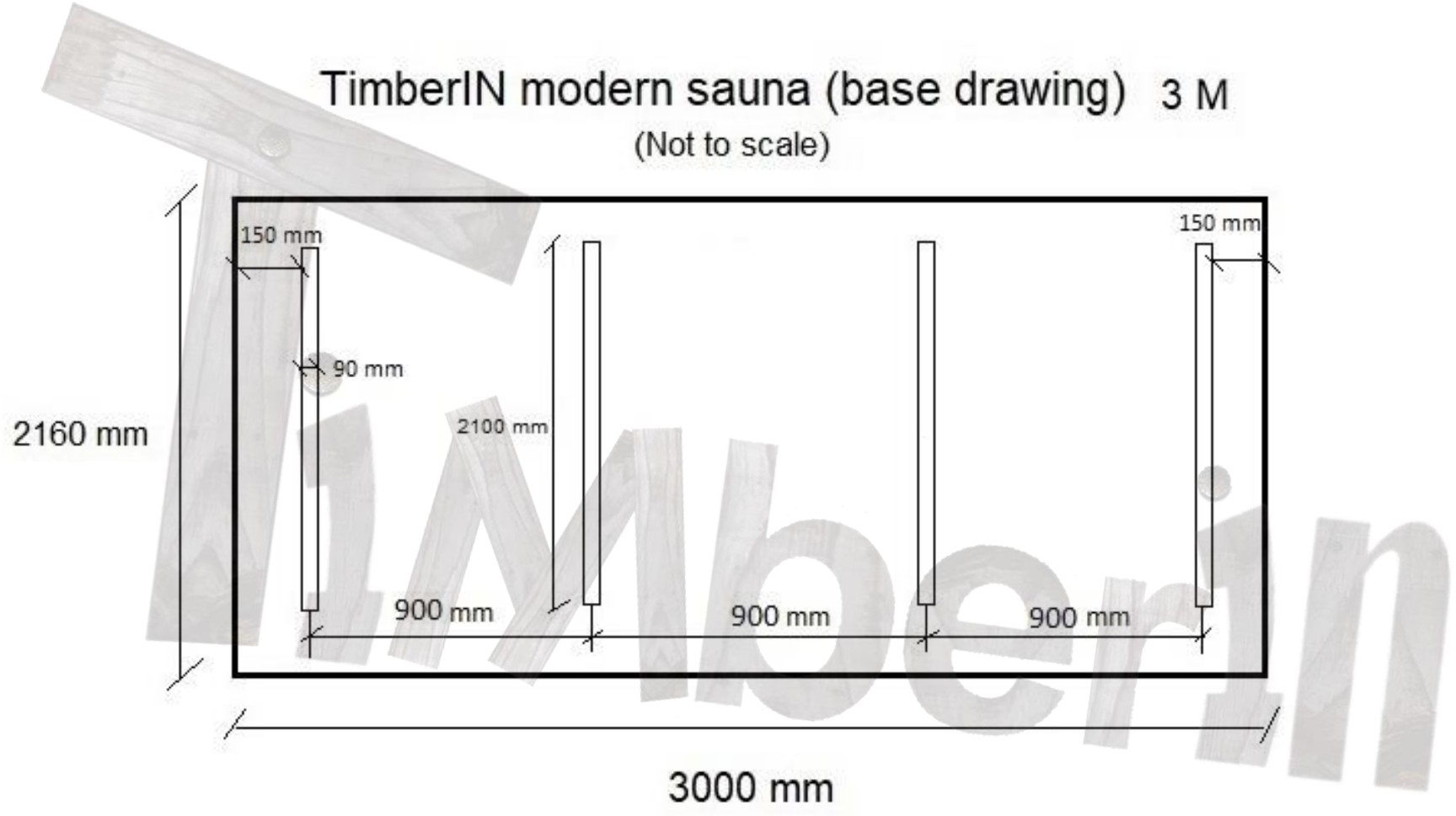

DELIVERY INFO

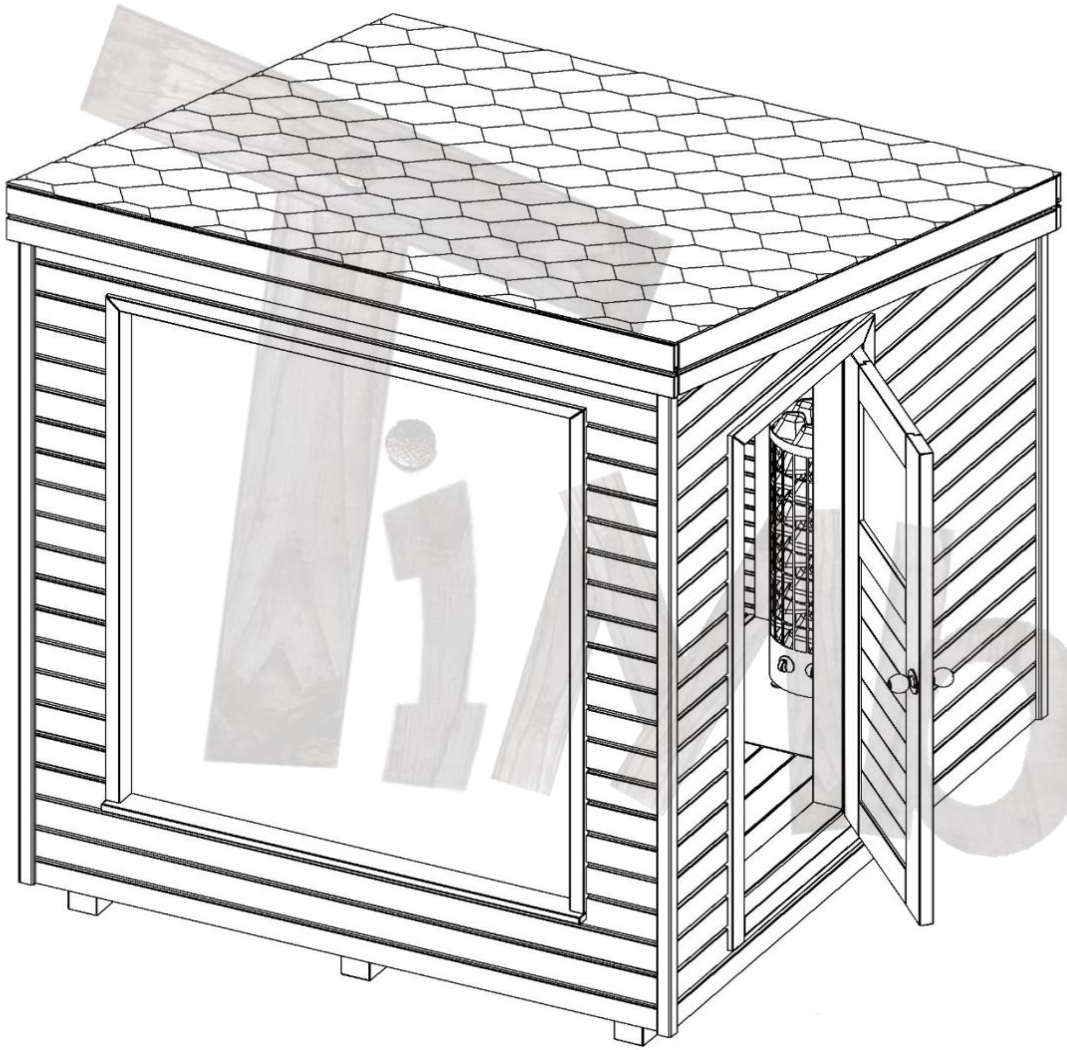

MODEL 3000 MM MODERN SAUNA	DELIVERY INFO
Assembled sauna measurements for shipping	Height: 2550 mm Width: 2230 mm Length: 3370 mm Weight ~1500 kg

4000 MM MODERN SAUNA

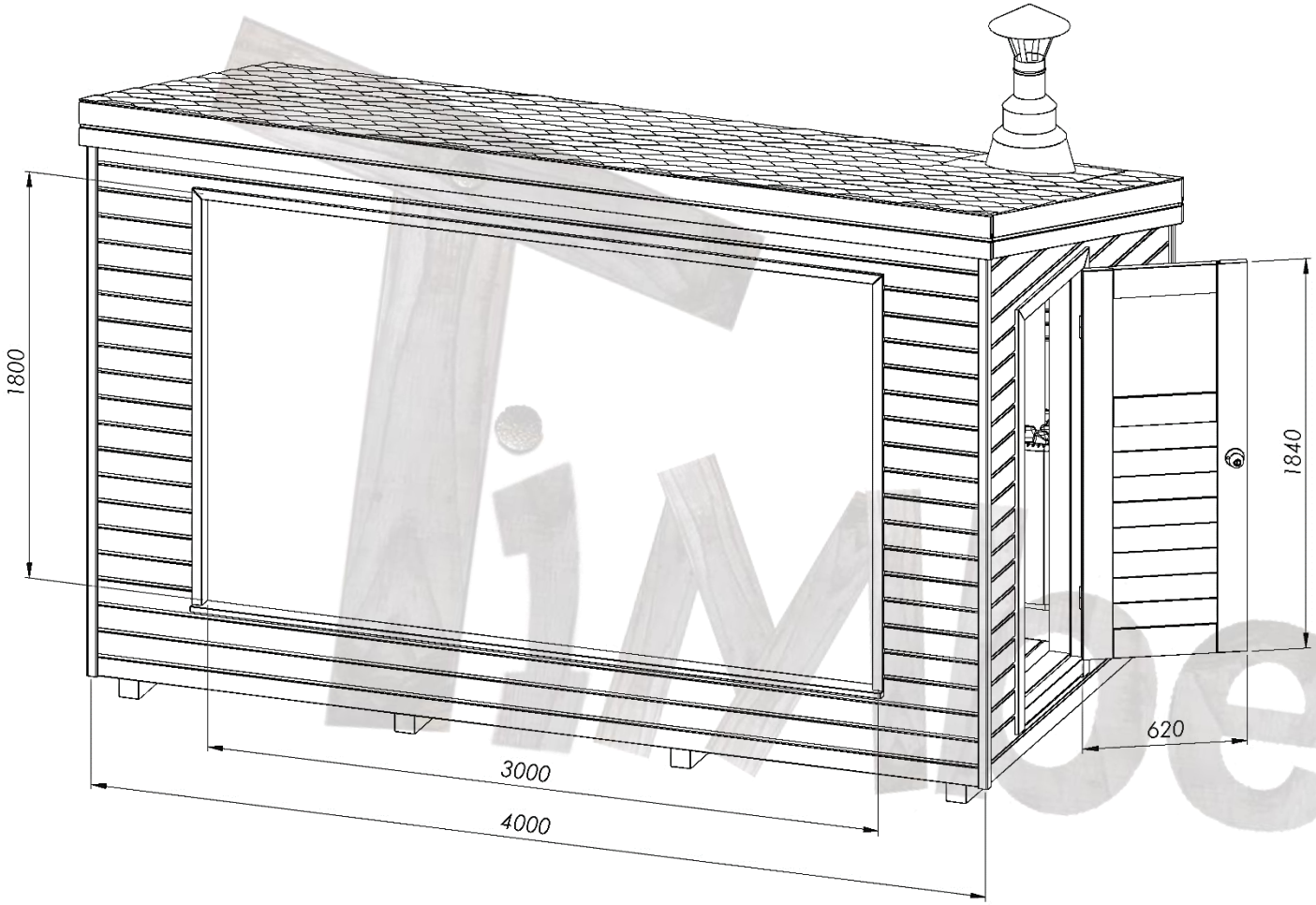

MODEL	4000 MM MODERN SAUNA
Seating capacity	6 - 8
Length	4000 mm
Width	2230 mm
Height	2550 mm
Panoramic window	1800 x 3000 mm
Recommended official “Harvia” heater for this sauna	Harvia M3 Harvia M3 SL Harvia 20 PRO Harvia 20 SL

INTERIOR LAYOUT (1)

SAUNA ROOM

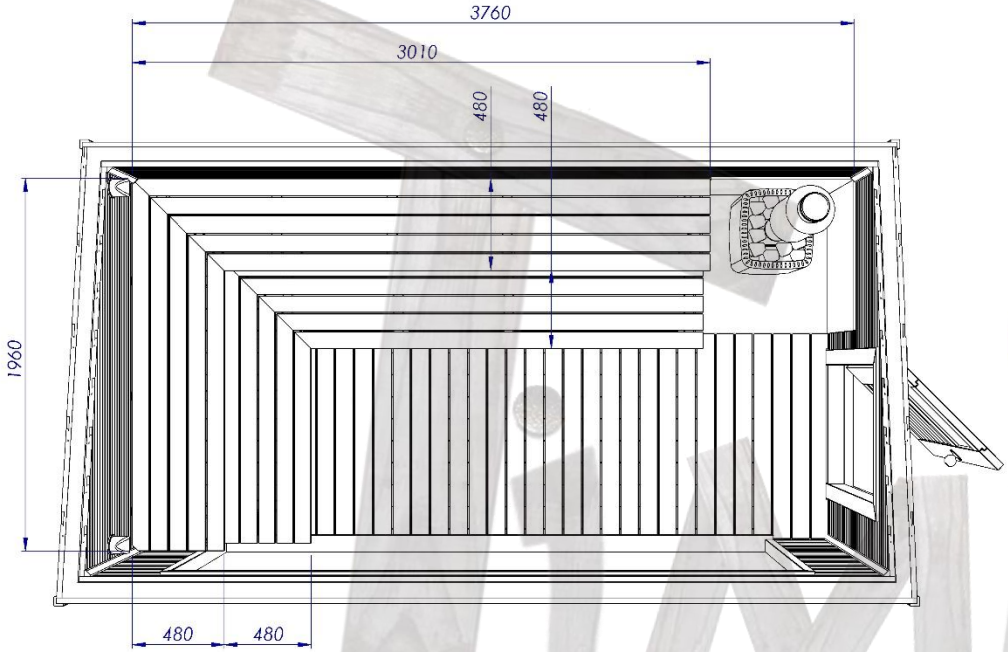

MODEL	INTERIOR LAYOUT of insulated sauna
Length outside	4000 mm
Length inside	3760 mm
Width outside	2230 mm
Width inside	1960 mm
Length of the benches	1960 mm and 3010 mm
Width of the benches	480 mm

SAUNA ROOM + DRESSING ROOM

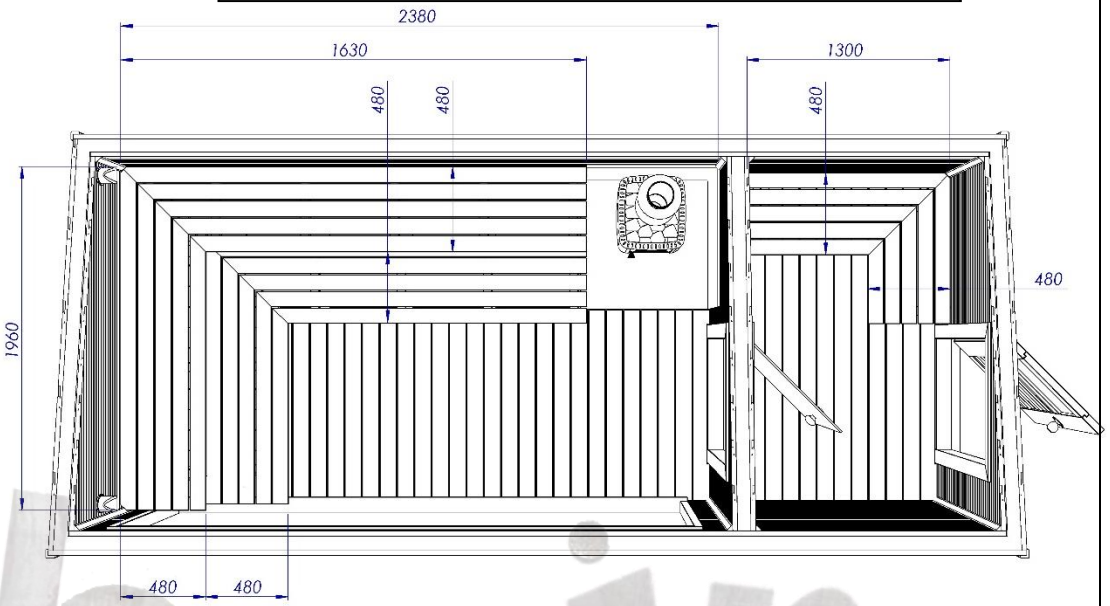

MODEL	INTERIOR LAYOUT of insulated sauna
Length outside	4000 mm
Length inside in sauna room	2380 mm
Length inside in dressing room	1300 mm
Width outside	2230 mm
Width inside	1960 mm
Length of the benches	1960 mm and 1630 mm
Width of the benches	480 mm

Tylberin

INTERIOR LAYOUT (2)

MODEL	INTERIOR LAYOUT of insulated sauna
Height of the benches	490 mm 970 mm
Width of the benches	480 mm
Height inside	1650 mm 2120 mm

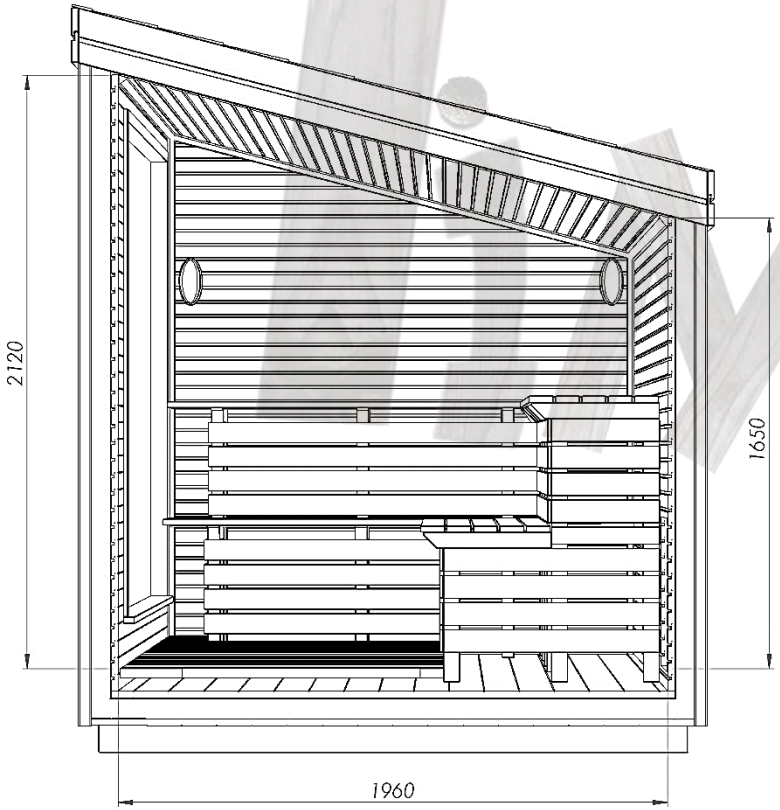

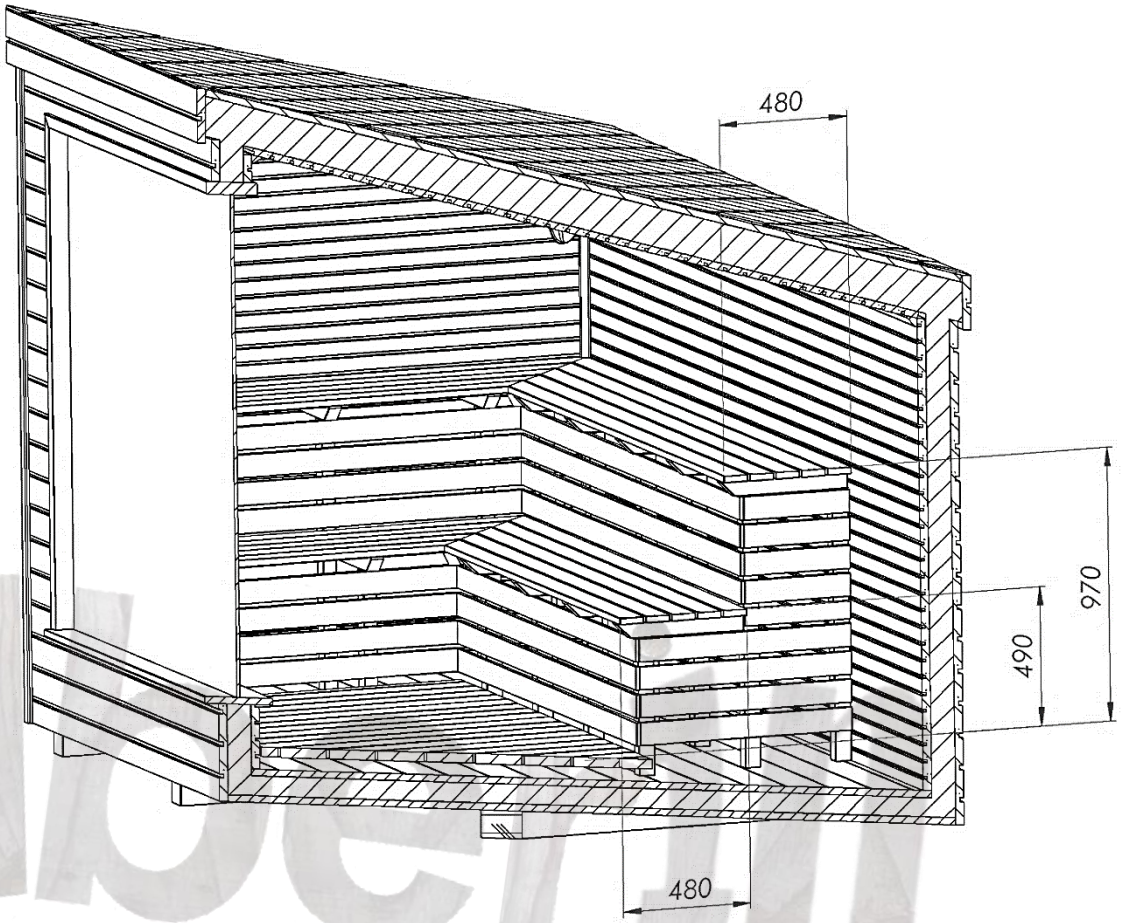

BASE MEASUREMENTS

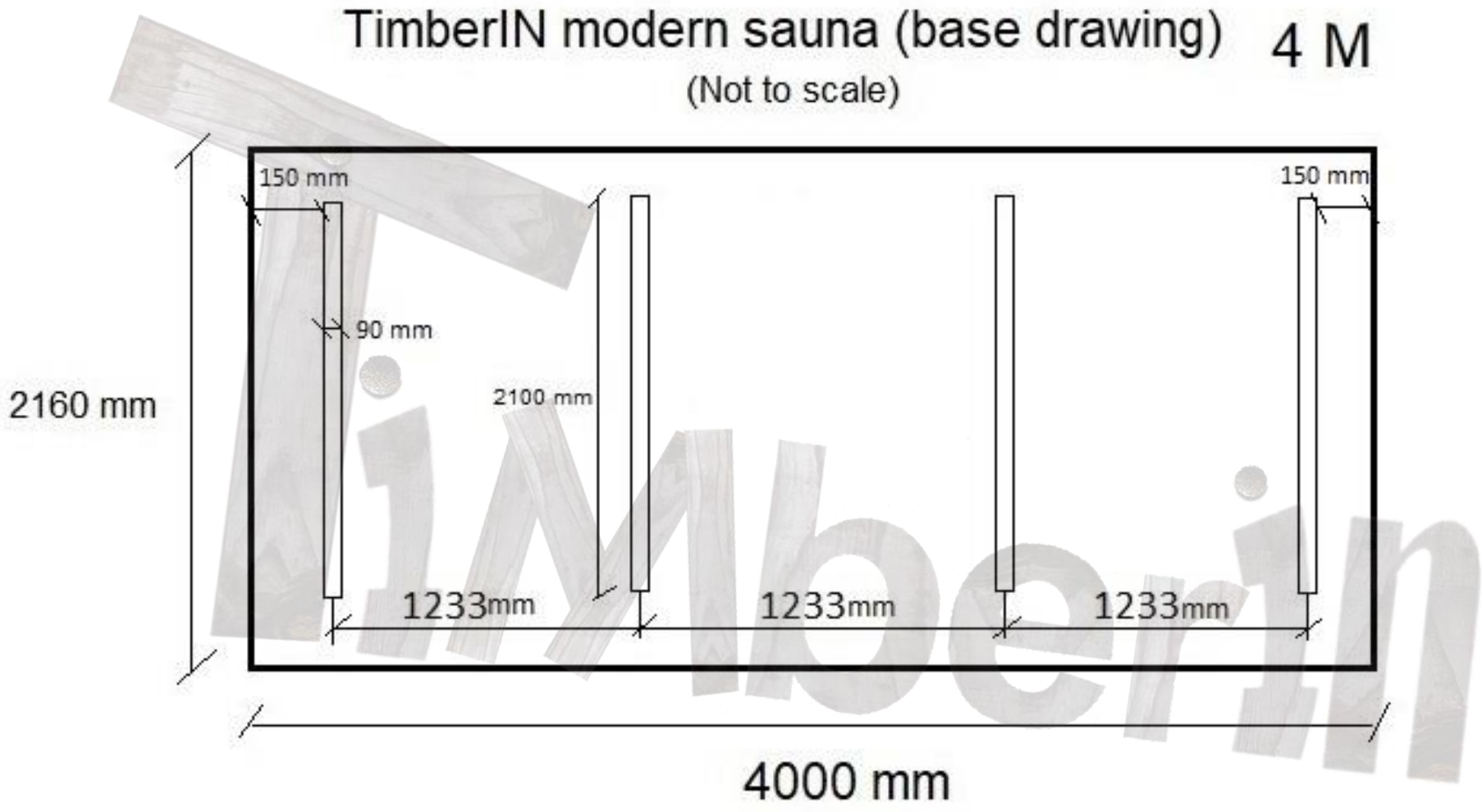

TimberIN

DELIVERY INFO

SAUNA ROOM

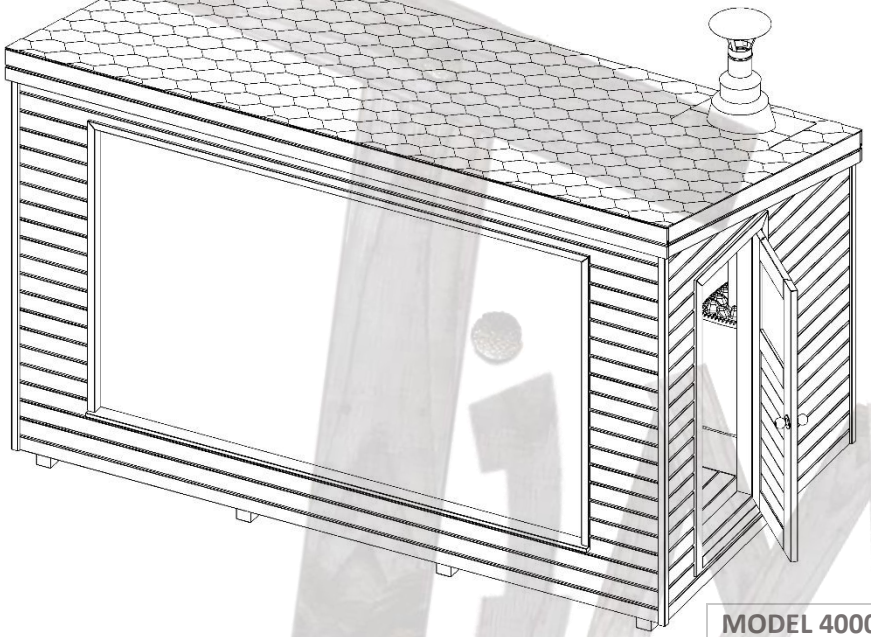

SAUNA ROOM + DRESSING ROOM

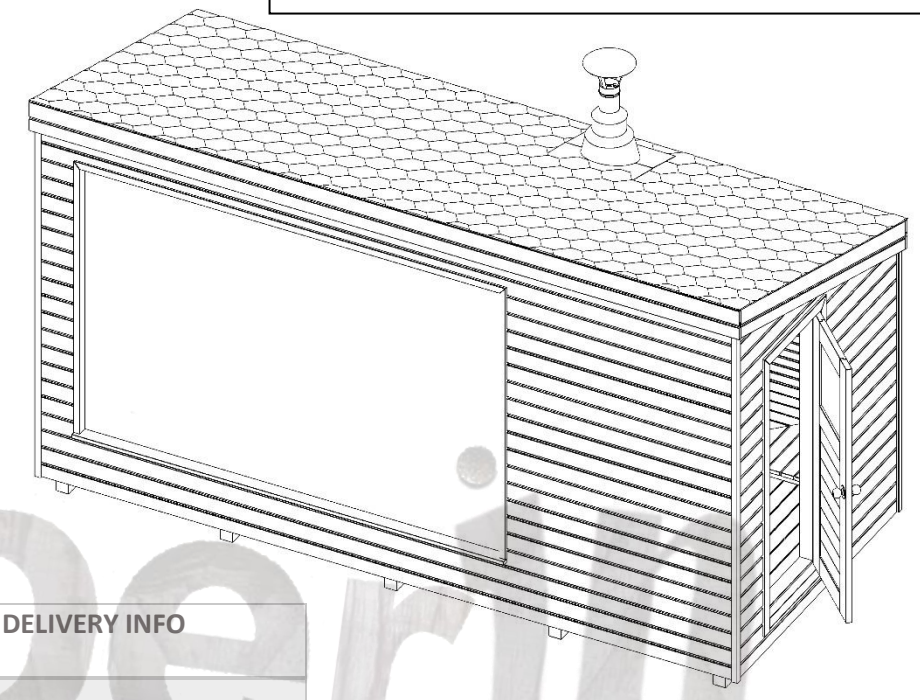

MODEL 4000 MM MODERN SAUNA	DELIVERY INFO
Assembled sauna measurements for shipping	Height: 2550 mm Width: 2230 mm Length: 4370 mm Weight ~2000 kg

5000 MM MODERN SAUNA

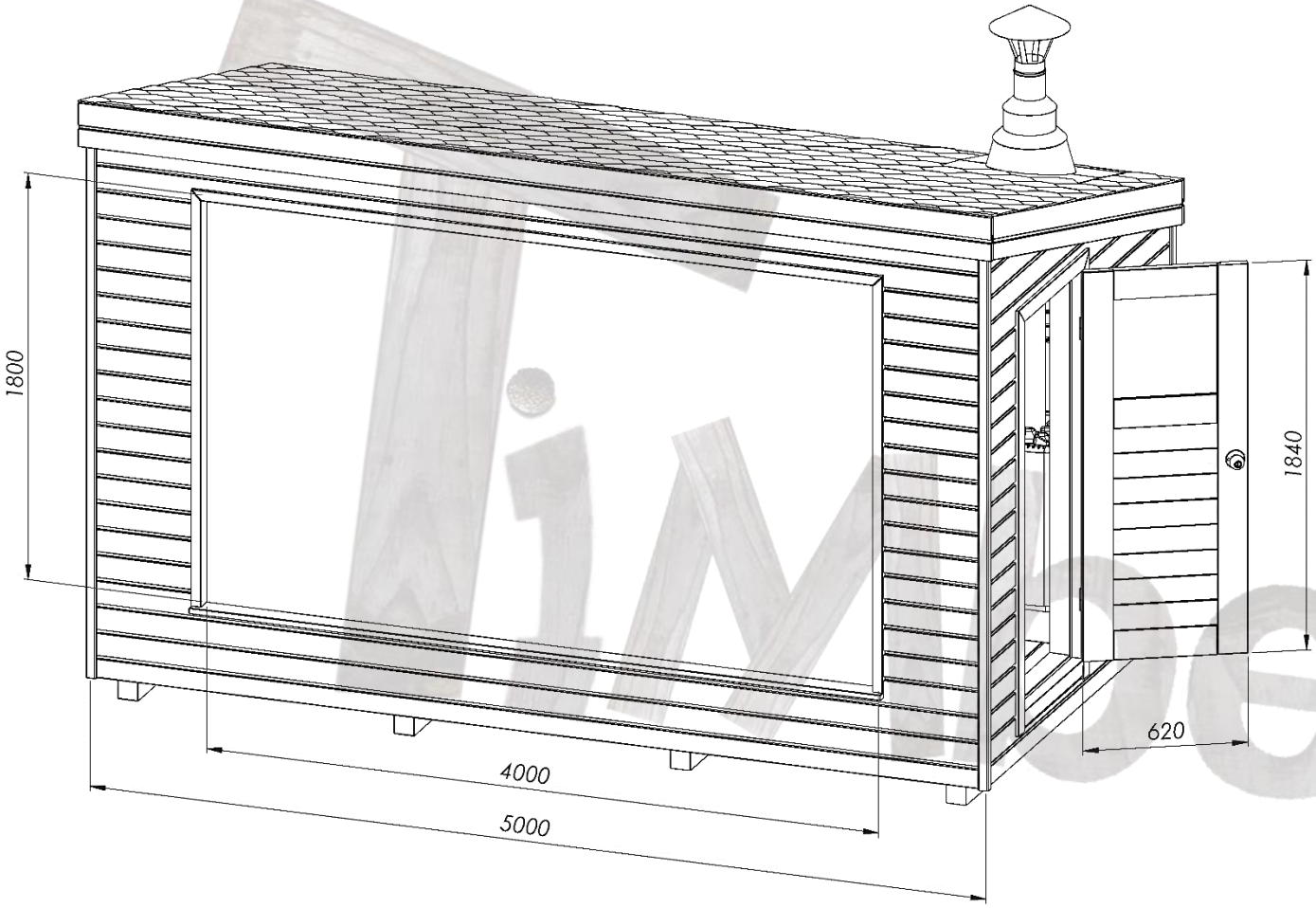

MODEL	5000 MM MODERN SAUNA
Seating capacity	8 - 10
Length	5000 mm
Width	2230 mm
Height	2550 mm
Panoramic window	1800 x 4000 mm
Recommended official “Harvia” heater for this sauna	Harvia M3 Harvia M3 SL Harvia 20 PRO Harvia 20 SL

INTERIOR LAYOUT (1)

SAUNA ROOM

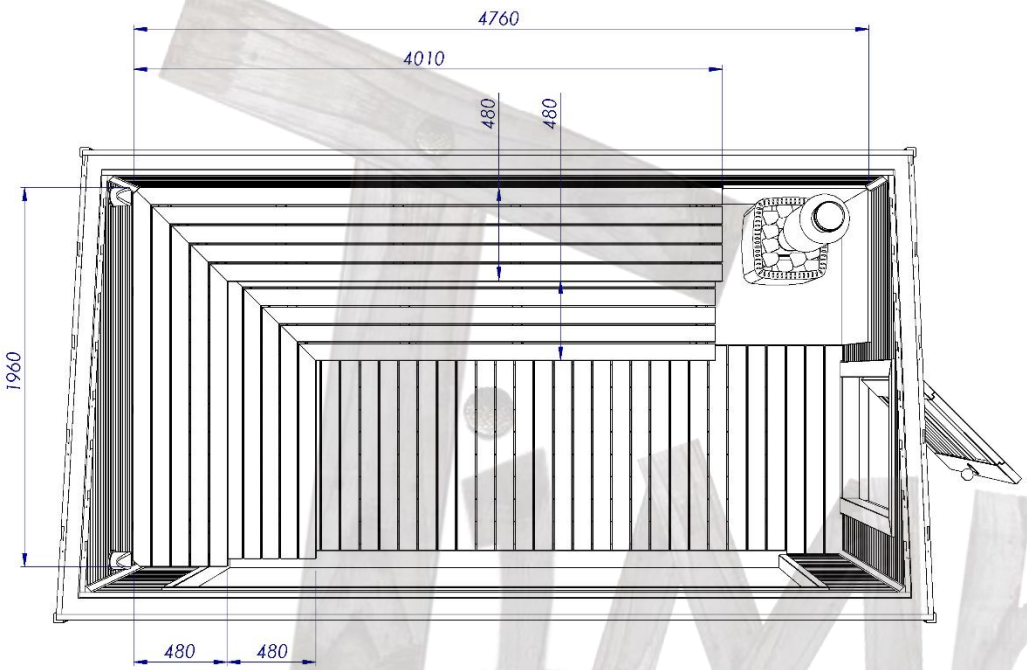

MODEL	INTERIOR LAYOUT of insulated sauna
Length outside	5000 mm
Length inside	4760 mm
Width outside	2230 mm
Width inside	1960 mm
Length of the benches	1960 mm and 4010 mm
Width of the benches	480 mm

SAUNA ROOM + DRESSING ROOM

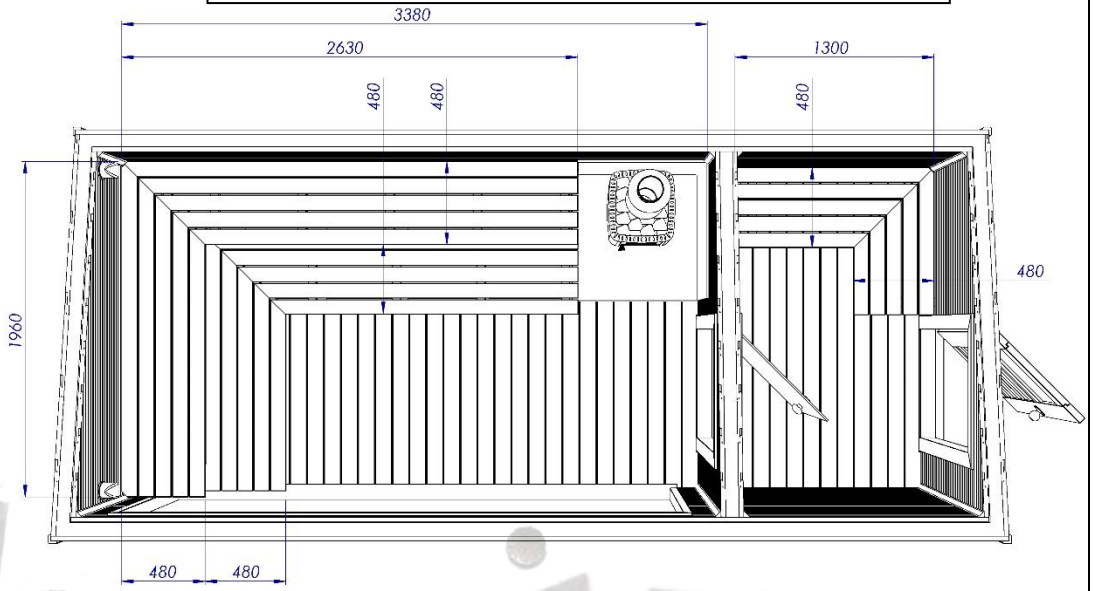

MODEL	INTERIOR LAYOUT of insulated sauna
Length outside	5000 mm
Length inside in sauna room	3380 mm
Length inside in dressing room	1300 mm
Width outside	2230 mm
Width inside	1960 mm
Length of the benches	1960 mm and 2630 mm
Width of the benches	480 mm

Mberin

INTERIOR LAYOUT (2)

MODEL	INTERIOR LAYOUT of insulated sauna
Height of the benches	490 mm 970 mm
Width of the benches	480 mm
Height inside	1650 mm 2120 mm

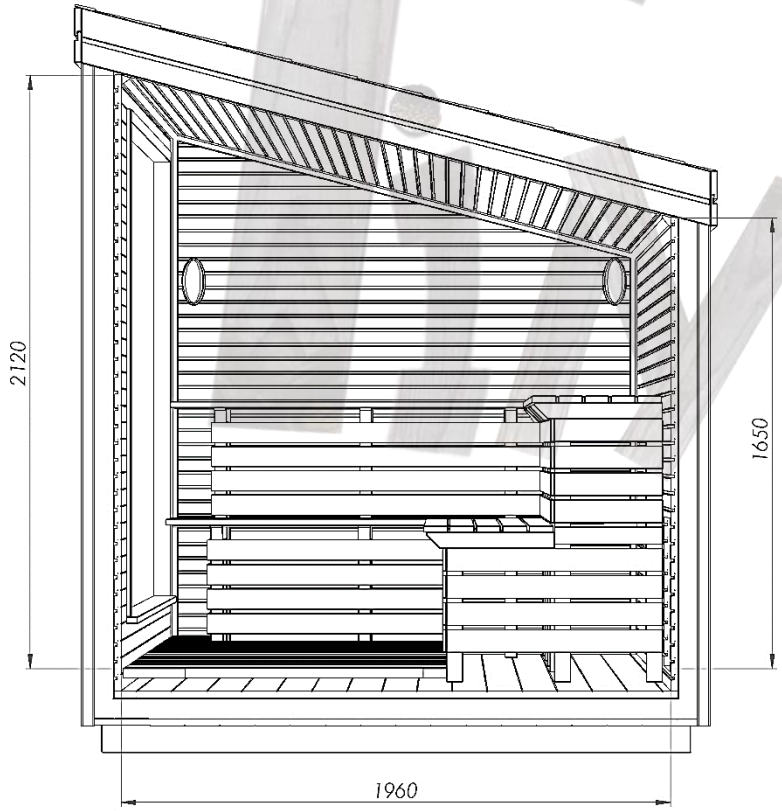

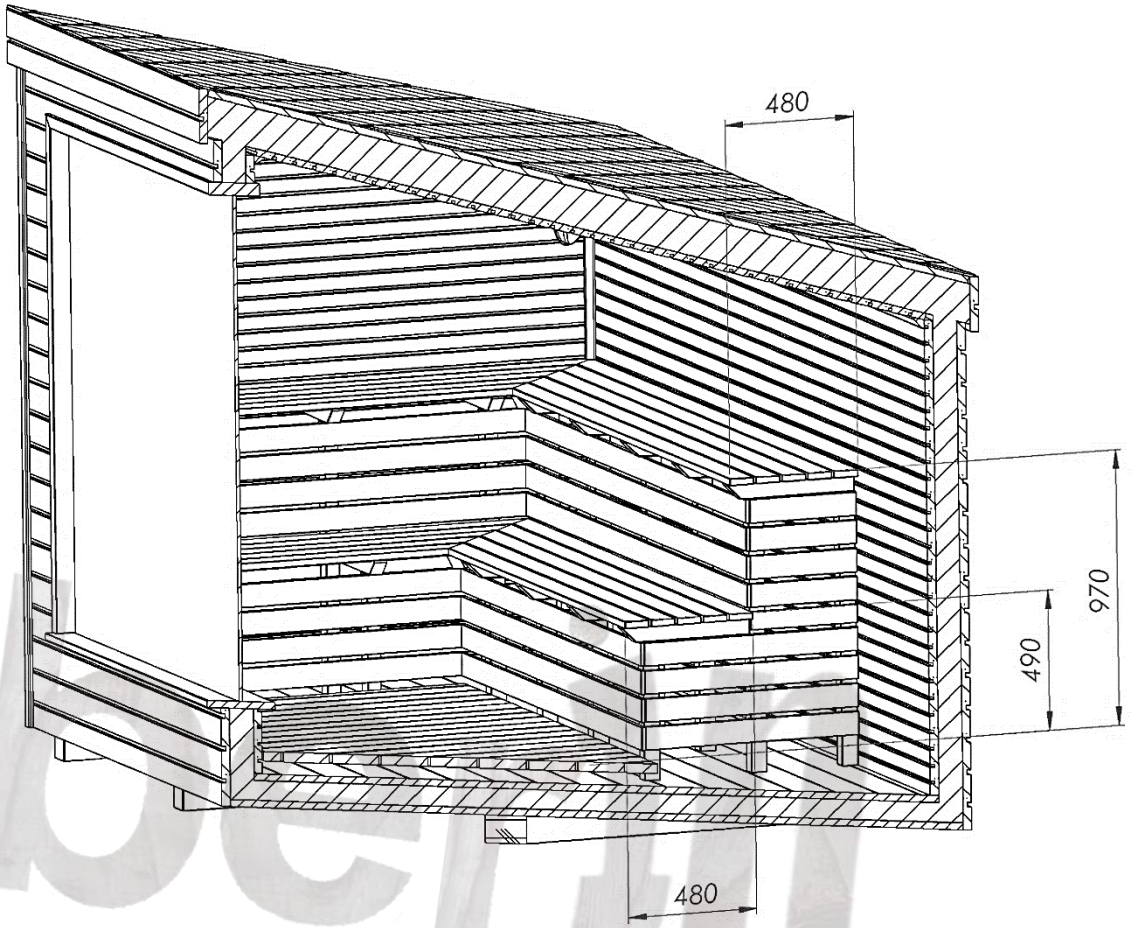

BASE MEASUREMENTS

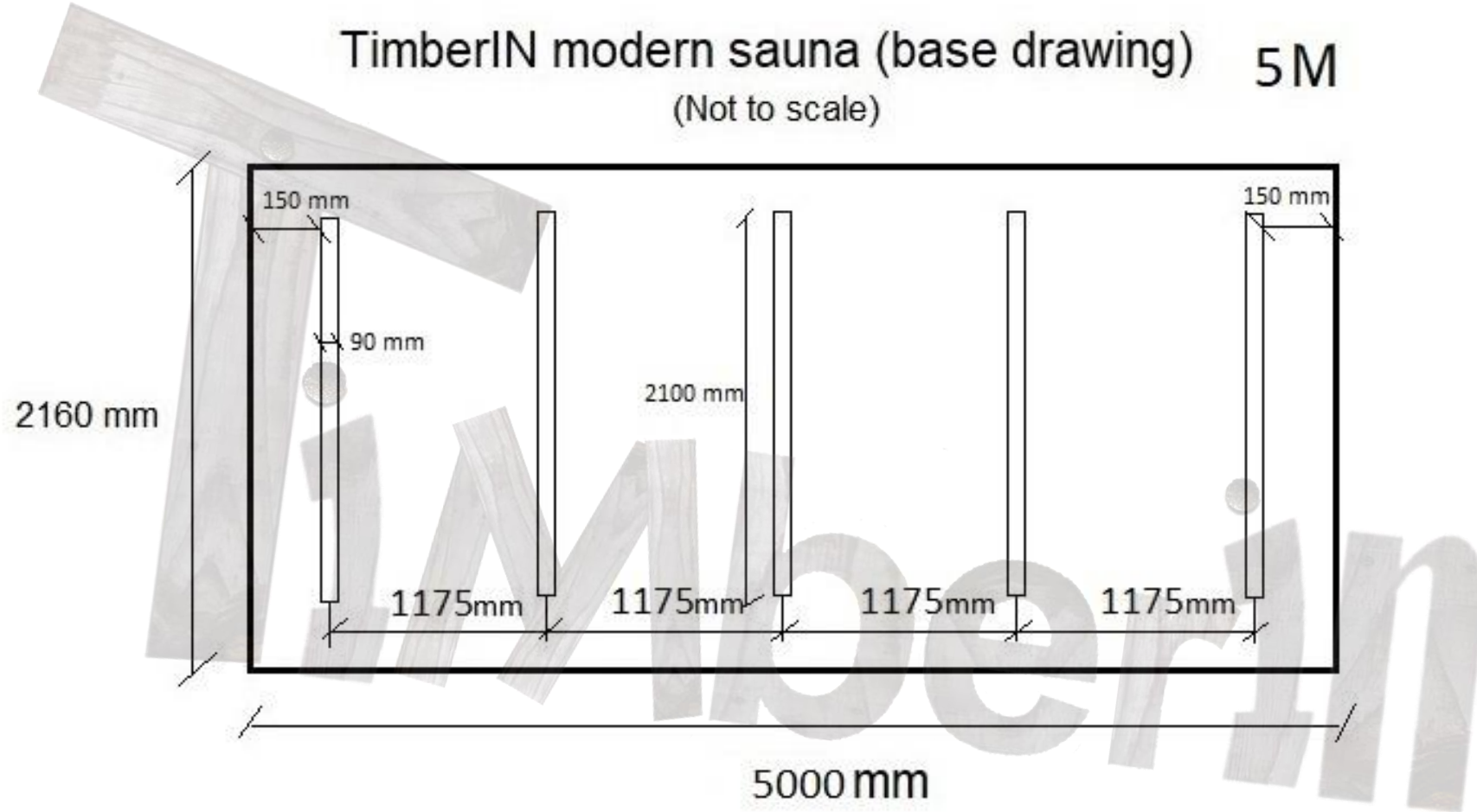

DELIVERY INFO

SAUNA ROOM

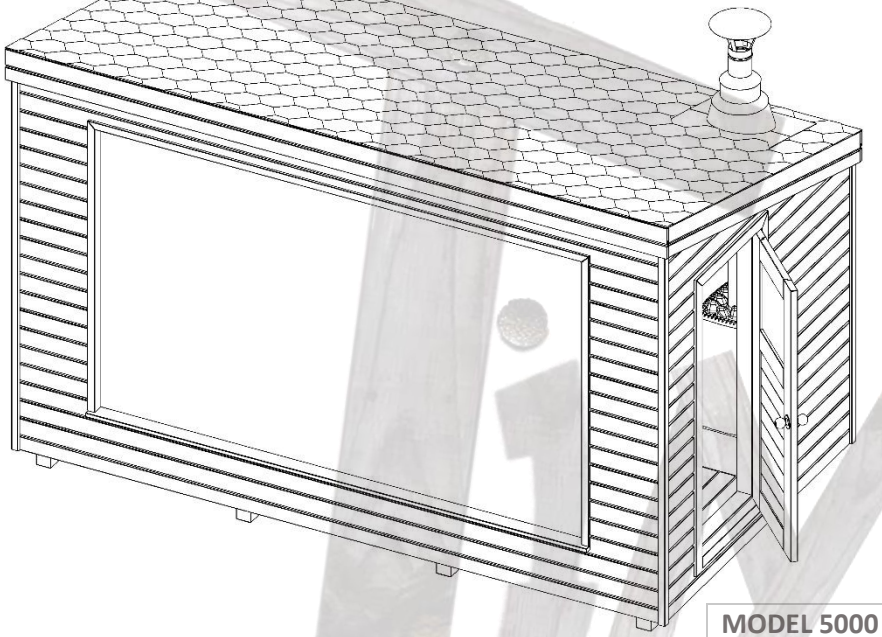

SAUNA ROOM + DRESSING ROOM

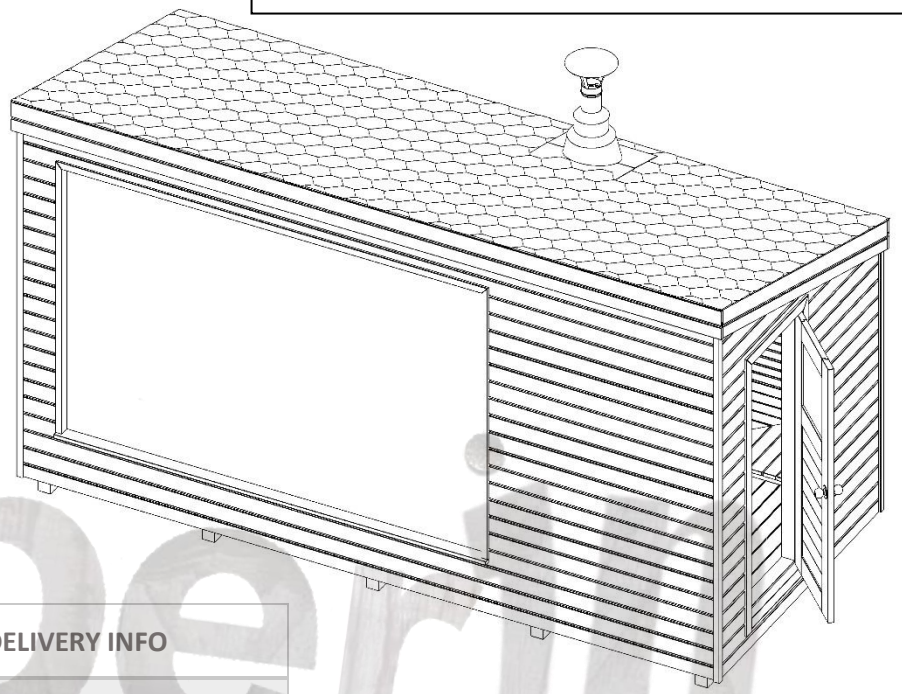

MODEL 5000 MM MODERN SAUNA	DELIVERY INFO
Assembled sauna measurements for shipping	Height: 2550 mm Width: 2230 mm Length: 5370 mm Weight ~2500 kg

WOOD BURNING HARVIA HEATERS

Recommended for 2 – 4 meter sauna room
Harvia M3 + chimney



The Harvia M3 has a classic design and is suitable for smaller, woodburning saunas. It turns a sauna bath into a pleasurable experience and adds a touch of traditional sauna atmosphere. The even heat and efficient air circulation guarantee an enjoyable bath.

Output 16,5 kW

Stones max. 30 kg

User manual HERE

Recommended for 2 - 4 meter sauna room
Harvia M3 SL + chimney (logs loaded from outside instead of inside)



The SL models are designed for people who want to conveniently heat their sauna from another room or outside the building. SL stoves provide great bathing in small and medium-sized saunas.

Output 16,5 kW

Stones max. 30 kg

User manual HERE

Recommended for 4 – 5 meter sauna room
Harvia 20 PRO + chimney



Harvia 20 Pro gives a good hot bath in medium-sized saunas. It has a big stone space and an air-flow spoiler made of stainless steel. Through the cast-iron glass door the warm glow of the fire adds to the sauna atmosphere.

Output 24,1 kW

Stones max. 40 kg

User manual HERE

Recommended for 4 – 5 meter sauna room
Harvia 20 SL + chimney (logs loaded from outside instead of inside)



The SL models are designed for people who want to conveniently heat their sauna from another room or outside the building. SL stoves provide great bathing in small and medium-sized saunas.

Output 24,1 kW

Stones max. 40 kg

User manual HERE

WOOD BURNING HARVIA HEATER SAFETY DISTANCES APPLIED IN TIMBERIN SAUNAS ACCORING TO OFFICIAL HARVIA HEATERS SAFETY REQUIREMENTS

HARVIA M3 / HARVIA M3 SL:

- Walls and benches made of inflammable materials. The minimum safety distances to inflammable materials:
  - on either side – 25 cm (B),
  - behind the stove – 30 cm (C), *due to installed cetris panel behind the heater the distance can be minimized,*
  - in the front – approx. 30 cm (D).
- Heater ground area is covered with cetris panel.

HARVIA 20 PRO / HARVIA 20 SL:

- Walls and benches made of inflammable materials. The minimum safety distances to inflammable materials:
  - on either side – 30 cm (B),
  - behind the stove – 30 cm (C), *due to installed cetris panel behind the heater the distance can be minimized,*
  - in the front – approx. 30 cm (D).
- Heater ground area is covered with cetris panel.

SAUNA CHIMNEY:

- Non insulated chimney min. 50 cm from inflammable materials (*side materials can be cover with cetris panel to reduce the distance*).
- Insulation between roof and insulated chimney min. 10 cm.
- Chimney insulation going down from the roof min. 43 cm.

	A min.	B min.	C min.	D min.
M1, M2, M3/SL, Classic 140	1200	250	300	300
20 Pro, 20 SL/Duo, 20 ES Pro/S, 20 Boiler, 20 SL Boiler, Premium/VS, Classic 220/Duo, 20 RS/LS Pro	1300	300	300	300
26 Pro, Classic 280	1280	375	375	375
36, 36 Duo	1250	500	500	500
Linear 16, 16	1300	300	350	400
Linear 22, 22/S, Linear 22 RS/LS/ES, 22 RS/LS/ES S	1265	400	380	500
Linear 28	1380	400	400	500

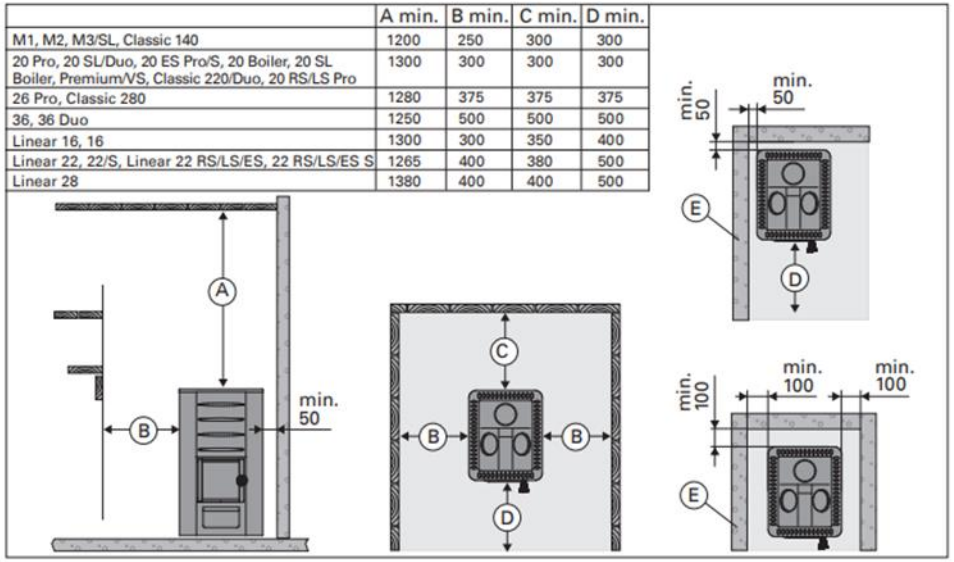

Figure 1 Safety distances (all dimensions in millimeters)

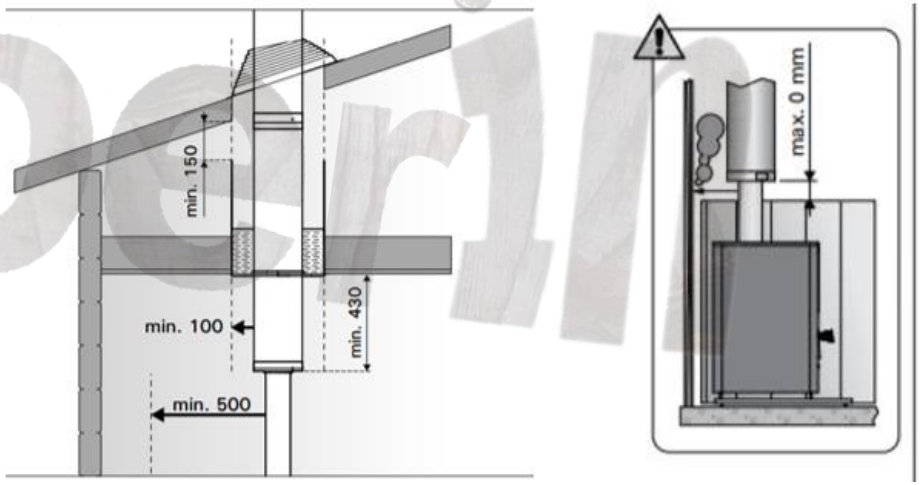

Figure 2 Safety distances for chimney (all dimensions in millimeters)

ELECTRIC HARVIA HEATERS

Recommended for 2 – 3 meter sauna room
Cilindro 9 kW (PC90) with an integrated control unit



Harvia Cilindro electric heater's massive sauna stone amount provides enjoyable sauna bath. Cilindro has an apertured outer casing made of stainless steel. You can adjust the nature of the heat from soft to sharp by throwing water either to the side of the heater or straight on top of the stone pillar.

Output 9 kW

Stones max. 80 kg

User manual HERE

Recommended for 4 meter sauna room
Cilindro 11 kW (PC110EE) including a separate control unit



Harvia Cilindro 110EE heaters provide enjoyable heat for larger family saunas and saunas with large proportions of glass. The heaters are physically larger than other Cilindro models and they share the same well-balanced design language.

Output 11 kW

Stones max. 120 kg

User manual HERE

Recommended for 5 meter sauna room
Cilindro 13 kW (PRO 135E) including a separate control unit (Xafir CS170)



The Cilindro Pro 135E is impressive source of heat and steam for family saunas, but commercial saunas, hotels and housing companies, for example, gain the most benefit from its features.

Output 13,2 kW

Stones max. 140 kg

User manual HERE

For steam – herbal sauna room
Senator combi 9 kW (T9C) including a separate control unit (Xafir CS110C)



Harvia Senator Combi is a combined electric heater and steamer offering multiple ways of sauna bathing. Your sauna can become a traditional Finnish sauna, a steam sauna, a herbal sauna or a fragrant sauna – all sauna experiences in the same package.

Output 9 kW

Stones max. 35 kg

User manual HERE

THERMAL INSULATION

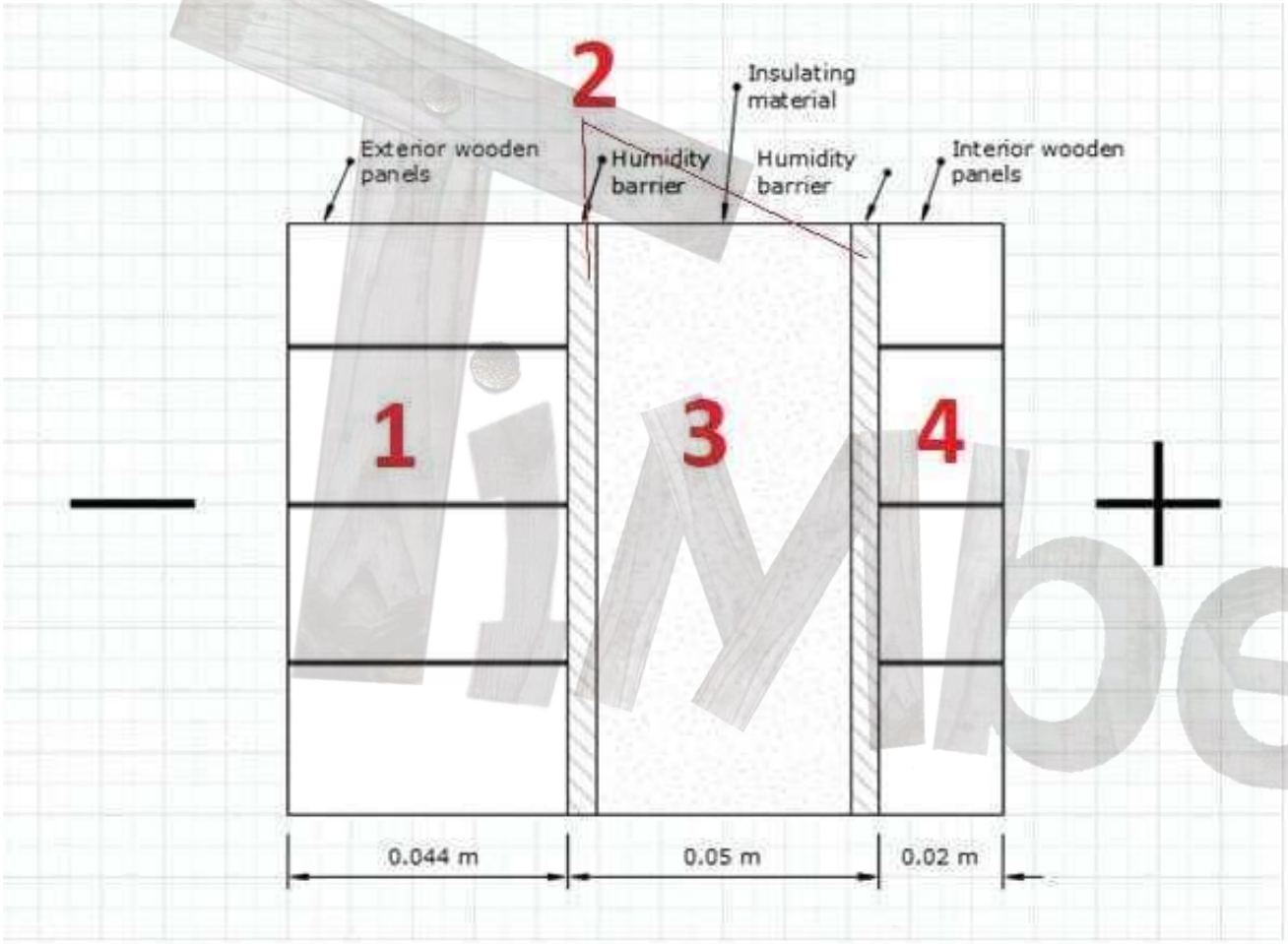

THE CROSS-SECTION VIEW OF INSULATED OUTDOOR SAUNA`S WALL

The first one (1) represents the wooden panels (44 mm thick).

The second one (2) – humidity barrier. The main aim of the humidity barrier is to eliminate the penetration of water or vapor to the insulation layer (3).

The nature of humidity barrier from outside and inside is different. The outside layer waterproofs the insulation and the inside humidity barrier does not allow the vapor to penetrate to the insulation layer. They both are very thin therefore their thickness is not mentioned.

The fourth (4) and the last layer is interior wooden panels, they are 20 mm of thickness. They are needed to support the insulation layer. It must be noted that the humidity barrier from the outside does not necessarily always have to be there. It depends on the type of sauna. The external wooden panels which form the wall of sauna are usually covered with bituminous shingles which act as waterproofing layer as well.

If you need more information then check our article HERE

INFORMACIÓN ADICIONAL

Las páginas siguientes añaden información actual de TimberIN (datos de 11/2026) a la ficha técnica original de las páginas anteriores. Si algún detalle difiere, consúltenos; se aplica el plano de pedido aprobado.

En esta sección

TimberIN Nordic Vista™ – ficha técnica 30

TimberIN Nordic Vista™ – ficha técnica

Una sauna de jardín rectangular con frente panorámico totalmente acristalado y tejado a un agua, en Thermowood. Cuatro longitudes, 2, 3, 4 y 5 m, de 2–4 hasta 8–10 personas. Incluye aislamiento completo de 50 mm, luces LED bajo los bancos, dos lámparas Harvia y una estufa Harvia; los modelos de 4 y 5 m admiten un vestidor de 1,5 m dentro de la longitud. Se entrega montada de fábrica.

2 / 3 / 4 / 5 m · ancho aprox. 2.230 mm · frente panorámico acristalado · Thermowood · aislamiento 50 mm · una estufa Harvia incluida

Datos técnicos

Longitudes	2, 3, 4 y 5 m (longitud total nominal)
Cuerpo exterior	Largo aprox. 2.050 / 3.050 / 4.050 / 5.050 mm; ancho aprox. 2.230 mm
Tejado	A un agua, largo aprox. 2.370 / 3.370 / 4.370 / 5.370 mm; altura aprox. 2.550 mm en el lado alto y 1.970 mm en el lado bajo; tejas negras, marrones o verdes
Interior	Ancho aprox. 1.960 mm; largo aprox. 1.760 / 2.760 / 3.760 / 4.760 mm; altura aprox. de 1.650 a 2.120 mm
Frente panorámico acristalado	Alto aprox. 1.800 mm; ancho aprox. 1.400 / 2.000 / 3.000 / 4.000 mm en el modelo de 2 / 3 / 4 / 5 m
Bancos	Dos niveles, fondo aprox. 480 mm, a aprox. 490 y 970 mm de altura. 2 m: una línea de bancos de 1.960 mm; 3, 4 y 5 m: en L, el segundo tramo crece con la longitud
Plazas	2 m: 2–4 · 3 m: 4–6 · 4 m: 6–8 · 5 m: 8–10 personas (toda la longitud como cabina de sauna)
Vestidor	Solo 4 y 5 m: vestidor opcional de 1,5 m dentro de la longitud total (cabina aprox. 2.380 / 3.380 mm, vestidor aprox. 1.300 mm; 4–6 / 6–8 personas), con una puerta de vidrio o de madera hacia la sauna
Terraza cubierta	Terraza cubierta opcional de 2 m junto a la cabina, con sitio para bancos y una bañera de agua fría (bañera no incluida); todas las longitudes
Madera	Thermowood (madera tratada térmicamente)
Paredes	Madera exterior de 44 mm, capas de protección, aislamiento de 50 mm y revestimiento interior de madera de 20 mm
Incluido	Frente panorámico acristalado; aislamiento completo de 50 mm; luces LED bajo los bancos; 2 lámparas Harvia en la sauna; puerta de entrada de madera con ventanita; una estufa Harvia (a elegir abajo)